VISIT…

LANZAROTE Caliente.COM

18

The Dynamics of the Class 1 Shell Tensegrity Structure

Robert E. Skelton
University of California, San Diego

Jean-Paul Pinaud
University of California, San Diego

D. L. Mingori
University of California, Los Angeles

18.1 Introduction
18.2 Tensegrity Definitions
A Typical Element • Rules of Closure for the Shell Class
18.3 Dynamics of a Two-Rod Element
18.4 Choice of Independent Variables and Coordinate Transformations
18.5 Tendon Forces
18.6 Conclusion
Appendix 18.A Proof of Theorem 18.1
Appendix 18.B Algebraic Inversion of the Q Matrix
Appendix 18.C General Case for (n, m) = (i, 1)
Appendix 18.D Example Case (n,m) = (3,1)
Appendix 18.E Nodal Forces

Abstract

A tensegrity structure is a special truss structure in a stable equilibrium with selected members designated for only tension loading, and the members in tension forming a continuous network of cables separated by a set of compressive members. This chapter develops an explicit analytical model of the nonlinear dynamics of a large class of tensegrity structures constructed of rigid rods connected by a continuous network of elastic cables. The kinematics are described by positions and velocities of the ends of the rigid rods; hence, the use of angular velocities of each rod is avoided.

The model yields an analytical expression for accelerations of all rods, making the model efficient for simulation, because the update and inversion of a nonlinear mass matrix are not required. The model is intended for shape control and design of deployable structures. Indeed, the explicit analytical expressions are provided herein for the study of stable equilibria and controllability, but control issues are not treated.

18.1 Introduction

The history of structural design can be divided into four eras classified by design objectives. In the prehistoric era, which produced such structures as Stonehenge, the objective was simply to oppose gravity, to take static loads. The classical era, considered the dynamic response and placed design constraints on the eigenvectors as well as eigenvalues. In the modern era, design constraints could be so demanding that the dynamic response objectives require feedback control. In this era, the

© 2002 by CRC Press LLC

control discipline followed the classical structure design, where the structure and control disciplines were ingredients in a multidisciplinary system design, but no interdisciplinary tools were developed to integrate the design of the structure and the control. Hence, in this modern era, the dynamics of the structure and control were not cooperating to the fullest extent possible. The post-modern era of structural systems is identified by attempts to unify the structure and control design for a common objective.

The ultimate performance capability of many new products and systems cannot be achieved until mathematical tools exist that can extract the full measure of cooperation possible between the dynamics of all components (structural components, controls, sensors, actuators, etc.). This requires new research. Control theory describes how the design of one component (the controller) should be influenced by the (given) dynamics of all other components. However, in systems design, where more than one component remains to be designed, there is inadequate theory to suggest how the dynamics of two or more components should influence each other at the design stage. In the future, controlled structures will not be conceived merely as multidisciplinary design steps, where a plate, beam, or shell is first designed, followed by the addition of control actuation. Rather, controlled structures will be conceived as an interdisciplinary process in which both material architecture and feedback information architecture will be jointly determined. New paradigms for material and structure design might be found to help unify the disciplines. Such a search motivates this work. Preliminary work on the integration of structure and control design appears in Skelton[1,2] and Grigoriadis et al.[3]

Bendsoe and others[4-7] optimize structures by beginning with a solid brick and deleting finite elements until minimal mass or other objective functions are extremized. But, a very important factor in determining performance is the paradigm used for structure design. This chapter describes the dynamics of a structural system composed of axially loaded compression members and tendon members that easily allow the unification of structure and control functions. Sensing and actuating functions can sense or control the tension or the length of tension members. Under the assumption that the axial loads are much smaller than the buckling loads, we treat the rods as rigid bodies. Because all members experience only axial loads, the mathematical model is more accurate than models of systems with members in bending. This unidirectional loading of members is a distinct advantage of our paradigm, since it eliminates many nonlinearities that plague other controlled structural concepts: hysteresis, friction, deadzones, and backlash.

It has been known since the middle of the 20th century that continua cannot explain the strength of materials. While science can now observe at the nanoscale to witness the architecture of materials preferred by nature, we cannot yet design or manufacture manmade materials that duplicate the incredible structural efficiencies of natural systems. Nature's strongest fiber, the spider fiber, arranges simple nontoxic materials (amino acids) into a microstructure that contains a continuous network of members in tension (amorphous strains) and a discontinuous set of members in compression (the β-pleated sheets in Figure 18.1).[8,9]

This class of structure, with a continuous network of tension members and a discontinuous network of compression members, will be called a Class 1 tensegrity structure. The important lessons learned from the tensegrity structure of the spider fiber are that

1. Structural members never reverse their role. The compressive members never take tension and, of course, tension members never take compression.
2. Compressive members do not touch (there are no joints in the structure).
3. Tensile strength is largely determined by the local topology of tension and compressive members.

Another example from nature, with important lessons for our new paradigms is the carbon nanotube often called the Fullerene (or Buckytube), which is a derivative of the Buckyball. Imagine

© 2002 by CRC Press LLC

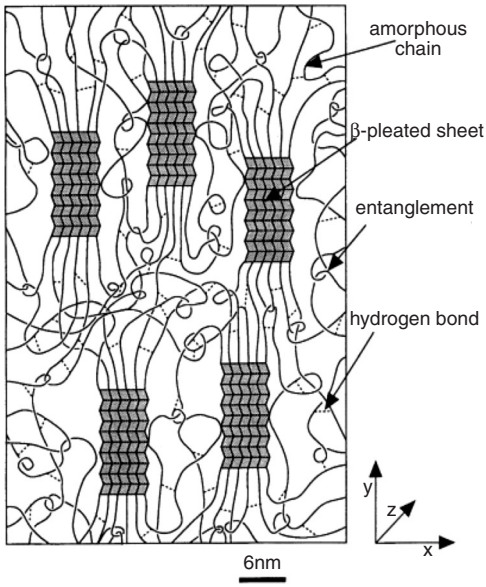

FIGURE 18.1 Nature's strongest fiber: the Spider Fiber. (From Termonia, Y., *Macromolecules*, 27, 7378–7381, 1994. Reprinted with permission from the American Chemical Society.)

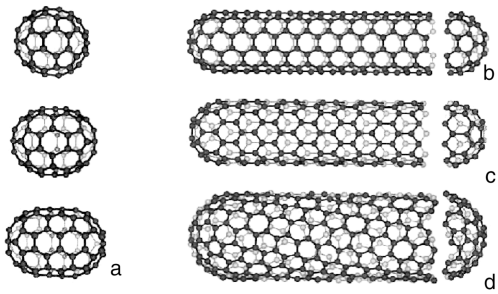

FIGURE 18.2 Buckytubes.

a 1-atom thick sheet of a graphene, which has hexagonal holes due to the arrangements of material at the atomic level (see Figure 18.2). Now imagine that the flat sheet is closed into a tube by choosing an axis about which the sheet is closed to form a tube. A specific set of rules must define this closure which takes the sheet to a tube, and the electrical and mechanical properties of the resulting tube depend on the rules of closure (axis of wrap, relative to the local hexagonal topology).[10] Smalley won the Nobel Prize in 1996 for these insights into the Fullerenes. The spider fiber and the Fullerene provide the motivation to construct manmade materials whose overall mechanical, thermal, and electrical properties can be predetermined by choosing the local topology and the rules of closure which generate the three-dimensional structure from a given local topology. By combining these motivations from Fullerenes with the tensegrity architecture of the spider fiber, this chapter derives the static and dynamic models of a shell class of tensegrity structures. Future papers will exploit the control advantages of such structures. The existing literature on tensegrity deals mainly[11-23] with some elementary work on dynamics in Skelton and Sultan,[24] Skelton and He,[25] and Murakami et al.[26]

© 2002 by CRC Press LLC

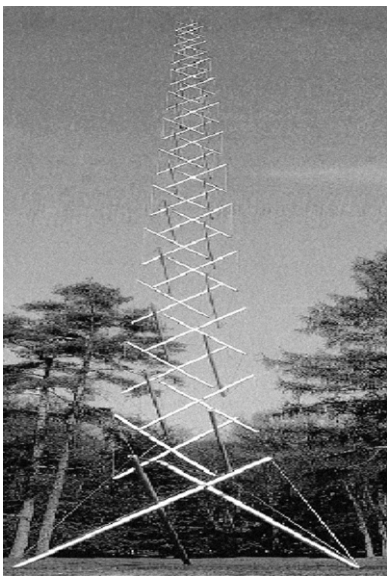

FIGURE 18.3 Needle Tower of Kenneth Snelson, Class 1 tensegrity. Kröller Müller Museum, The Netherlands. (From Connelly, R. and Beck, A., *American Scientist*, 86(2), 143, 1998. With permissions.)

18.2 Tensegrity Definitions

Kenneth Snelson built the first tensegrity structure in 1948 (Figure 18.3) and Buckminster Fuller coined the word "tensegrity." For 50 years tensegrity has existed as an art form with some architectural appeal, but engineering use has been hampered by the lack of models for the dynamics. In fact, engineering use of tensegrity was doubted by the inventor himself. Kenneth Snelson in a letter to R. Motro said, "As I see it, this type of structure, at least in its purest form, is not likely to prove highly efficient or utilitarian." This statement might partially explain why no one bothered to develop math models to convert the art form into engineering practice. We seek to use science to prove the artist wrong, that his invention is indeed more valuable than the artistic scope that he ascribed to it. Mathematical models are essential design tools to make engineered products. This chapter provides a dynamical model of a class of tensegrity structures that is appropriate for space structures.

We derive the nonlinear equations of motion for space structures that can be deployed or held to a precise shape by feedback control, although control is beyond the scope of this chapter. For engineering purposes, more precise definitions of tensegrity are needed.

One can imagine a truss as a structure whose compressive members are all connected with ball joints so that no torques can be transmitted. Of course, tension members connected to compressive members do not transmit torques, so that our truss is composed of members experiencing no moments. The following definitions are useful.

Definition 18.1 A given configuration of a structure is in a *stable equilibrium* if, in the absence of external forces, an arbitrarily small initial deformation returns to the given configuration.

Definition 18.2 A tensegrity structure is a stable system of axially loaded members.

Definition 18.3 A stable structure is said to be a "Class 1" tensegrity structure if the members in tension form a continuous network, and the members in compression form a discontinuous set of members.

© 2002 by CRC Press LLC

FIGURE 18.4 Class 1 and Class 2 tensegrity structures.

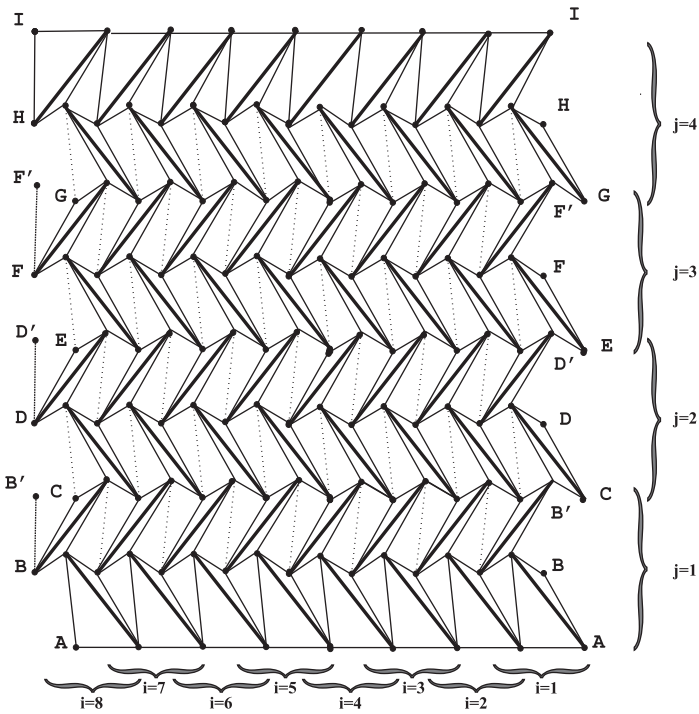

FIGURE 18.5 Topology of an (8,4) Class 1 tensegrity shell.

Definition 18.4 A stable structure is said to be a "Class 2" tensegrity structure if the members in tension form a continuous set of members, and there are at most two members in compression connected to each node.

Figure 18.4 illustrates Class 1 and Class 2 tensegrity structures.

Consider the topology of structural members given in Figure 18.5, where thick lines indicate rigid rods which take compressive loads and the thin lines represent tendons. This is a Class 1 tensegrity structure.

Definition 18.5 Let the topology of Figure 18.5 describe a three-dimensional structure by connecting points A to A, B to B, C to C, I to I. This constitutes a "Class 1 tensegrity shell" if there exists a set of tensions in all tendons $t_{\alpha\beta\gamma}$, $\alpha = 1(\rightarrow 10$, $\beta = 1 \rightarrow n$, $\gamma = 1 \rightarrow m)$ such that the structure is in a stable equilibrium.

© 2002 by CRC Press LLC

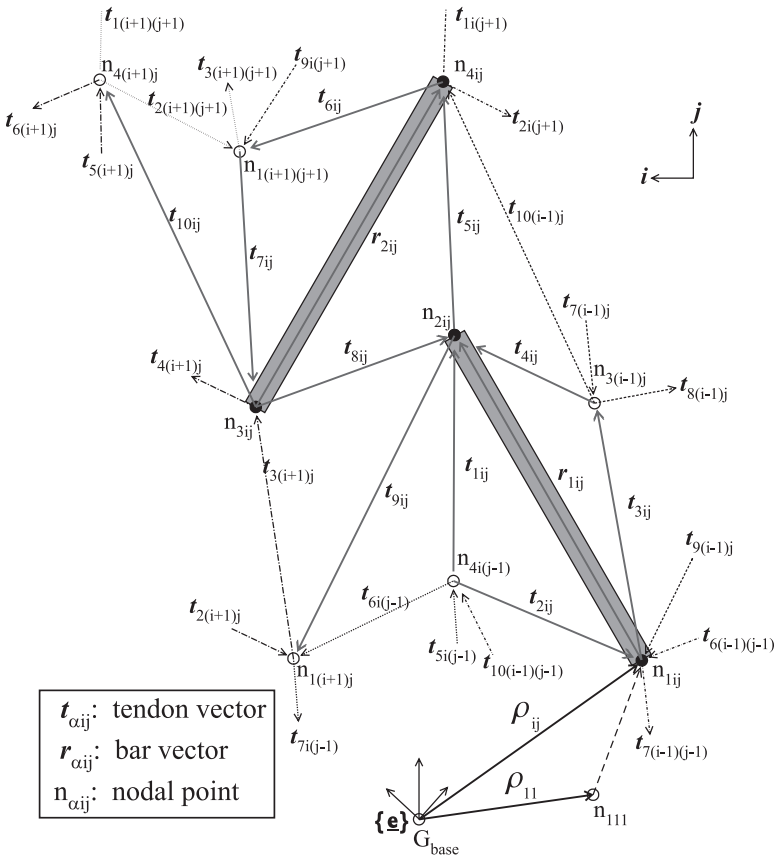

FIGURE 18.6 A typical *ij* element.

18.2.1 A Typical Element

The axial members in Figure 18.5 illustrate only the pattern of member connections and not the actual loaded configuration. The purpose of this section is two-fold: (i) to define a typical "element" which can be repeated to generate all elements, and (ii) to define rules of closure that will generate a "shell" type of structure.

Consider the members that make the typical *ij* element where $i = 1, 2, \ldots, n$ indexes the element to the left, and $j = 1, 2, \ldots, m$ indexes the element up the page in Figure 18.5. We describe the axial elements by vectors. That is, the vectors describing the *ij* element, are $\mathbf{t}_{1ij}$, $\mathbf{t}_{2ij}$, … $\mathbf{t}_{10ij}$ and $\mathbf{r}_{1ij}$, $\mathbf{r}_{2ij}$, where, within the *ij* element, $\mathbf{t}_{\alpha ij}$ is a vector whose tail is fixed at the specified end of tendon number α, and the head of the vector is fixed at the other end of tendon number α as shown in Figure 18.6 where $\alpha = 1, 2, \ldots, 10$. The *ij* element has two compressive members we call "rods," shaded in Figure 18.6. Within the *ij* element the vector $\mathbf{r}_{1ij}$ lies along the rod r_{1ij} and the vector $\mathbf{r}_{2ij}$ lies along the rod r_{2ij}. The first goal of this chapter is to derive the equations of motion for the dynamics of the two rods in the *ij* element. The second goal is to write the dynamics for the entire system composed of *nm* elements. Figures 18.5 and 18.7 illustrate these closure rules for the case $(n, m) = (8,4)$ and $(n, m) = (3,1)$.

Lemma 18.1 Consider the structure of Figure 18.5 with elements defined by Figure 18.6. A Class 2 tensegrity shell is formed by adding constraints such that for all $i = 1, 2, \ldots, n$, and for $m > j > 1$,

© 2002 by CRC Press LLC

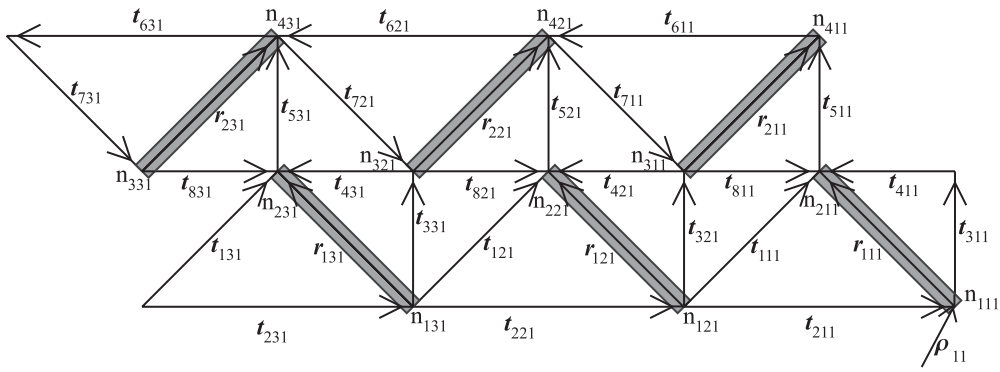

FIGURE 18.7 Class 1 shell: (n,m) = (3,1).

$$
\begin{aligned}
-\mathbf{t}_{1ij} + \mathbf{t}_{4ij} &= \mathbf{0}, \\
\mathbf{t}_{2ij} + \mathbf{t}_{3ij} &= \mathbf{0}, \\
\mathbf{t}_{5ij} + \mathbf{t}_{6ij} &= \mathbf{0}, \\
\mathbf{t}_{7ij} + \mathbf{t}_{8ij} &= \mathbf{0}.
\end{aligned} \tag{18.1}
$$

This closes nodes n_{2ij} and $n_{1(i+1)(j+1)}$ to a single node, and closes nodes $n_{3(i-1)j}$ and $n_{4i(j-1)}$ to a single node (with ball joints). The nodes are closed outside the rod, so that all tension elements are on the exterior of the tensegrity structure and the rods are in the interior.

The point here is that a Class 2 shell can be obtained as a special case of the Class 1 shell, by imposing constraints (18.1). To create a tensegrity structure not all tendons in Figure 18.5 are necessary. The following definition eliminates tendons $\mathbf{t}_{9ij}$ and $\mathbf{t}_{10ij}$, (i = 1 → n, j = 1 → m).

Definition 18.6 Consider the shell of Figures 18.4. and 18.5, which may be Class 1 or Class 2 depending on whether constraints (18.1) are applied. In the absence of dotted tendons (labeled t_9 and t_{10}), this is called a primal tensegrity shell. When all tendons t_9, t_{10} are present in Figure 18.5, it is called simply a Class 1 or Class 2 tensegrity shell.

The remainder of this chapter focuses on the general Class 1 shell of Figures 18.5 and 18.6.

18.2.2 Rules of Closure for the Shell Class

Each tendon exerts a positive force away from a node and $\mathbf{f}_{\alpha\beta\gamma}$ is the force exerted by tendon $\mathbf{t}_{\alpha\beta\gamma}$ and $\hat{\mathbf{f}}_{\alpha ij}$ denotes the force vector acting on the node $n_{\alpha ij}$. All $\mathbf{f}_{\alpha ij}$ forces are postive in the direction of the arrows in Figure 18.6, where $\mathbf{w}_{\alpha ij}$ is the external applied force at node $n_{\alpha ij}$, $\alpha = 1, 2, 3, 4$. At the base, the rules of closure, from Figures 18.5 and 18.6, are

$$\mathbf{t}_{9i1} = -\mathbf{t}_{1i1},\ i = 1, 2, \ldots, n \tag{18.2}$$

$$\mathbf{t}_{6i0} = \mathbf{0} \tag{18.3}$$

$$\mathbf{t}_{600} = -\mathbf{t}_{2n1} \tag{18.4}$$

$$\mathbf{t}_{901} = \mathbf{t}_{9n1} = -\mathbf{t}_{1n1} \tag{18.5}$$

$$\mathbf{0} = \mathbf{t}_{10(i-1)0} = \mathbf{t}_{5i0} = \mathbf{t}_{7i0} = \mathbf{t}_{7(i-1)0},\ i = 1, 2, \ldots, n. \tag{18.6}$$

© 2002 by CRC Press LLC

At the top, the closure rules are

$$\mathbf{t}_{10im} = -\mathbf{t}_{7im} \tag{18.7}$$

$$\mathbf{t}_{100m} = -\mathbf{t}_{70m} = -\mathbf{t}_{7nm} \tag{18.8}$$

$$\mathbf{t}_{2i(m+1)} = \mathbf{0} \tag{18.9}$$

$$\begin{aligned} \mathbf{0} &= \mathbf{t}_{1i(m+1)} = \mathbf{t}_{9i(m+1)} = \mathbf{t}_{3(i+1)(m+1)} \\ &= \mathbf{t}_{1(i+1)(m+1)} = \mathbf{t}_{2(i+1)(m+1)}. \end{aligned} \tag{18.10}$$

At the closure of the circumference (where $i = 1$):

$$\mathbf{t}_{90j} = \mathbf{t}_{9nj}, \qquad \mathbf{t}_{60(j-1)} = \mathbf{t}_{6n(j-1)}, \qquad \mathbf{t}_{70(j-1)} = \mathbf{t}_{7n(j-1)} \tag{18.11}$$

$$\mathbf{t}_{80j} = \mathbf{t}_{8nj}, \qquad \mathbf{t}_{70j} = \mathbf{t}_{7nj}, \qquad \mathbf{t}_{100(j-1)} = \mathbf{t}_{10n(j-1)}. \tag{18.12}$$

From Figures 18.5 and 18.6, when $j = 1$, then

$$\mathbf{0} = \mathbf{f}_{7i(j-1)} = \mathbf{f}_{7(i-1)(j-1)} = \mathbf{f}_{5i(j-1)} = \mathbf{f}_{10(i-1)(j-1)}, \tag{18.13}$$

and for $j = m$ where,

$$\mathbf{0} = \mathbf{f}_{1i(m+1)} = \mathbf{f}_{9i(m+1)} = \mathbf{f}_{3(i+1)(m+1)} = \mathbf{f}_{1(i+1)(m+1)}. \tag{18.14}$$

Nodes n_{11j}, n_{3nj}, n_{41j} for $j = 1, 2, \ldots, m$ are involved in the longitudinal "zipper" that closes the structure in circumference. The forces at these nodes are written explicitly to illustrate the closure rules.

In 18.4, rod dynamics will be expressed in terms of sums and differences of the nodal forces, so the forces acting on each node are presented in the following form, convenient for later use. The definitions of the matrices $\mathbf{B}_i$ are found in Appendix 18.E.

The forces acting on the nodes can be written in vector form:

$$\mathbf{f} = \mathbf{B}^d\mathbf{f}^d + \mathbf{B}^o\mathbf{f}^o + \mathbf{W}^o\mathbf{w} \tag{18.15}$$

where

$$\mathbf{f} = \begin{bmatrix} \mathbf{f}_1 \\ \vdots \\ \mathbf{f}_m \end{bmatrix}, \mathbf{f}^d = \begin{bmatrix} \bar{\mathbf{f}}_1^d \\ \mathbf{f}_2^d \\ \vdots \\ \mathbf{f}_m^d \end{bmatrix}, \mathbf{f}^o = \begin{bmatrix} \mathbf{f}_1^o \\ \vdots \\ \mathbf{f}_m^o \end{bmatrix}, \mathbf{w} = \begin{bmatrix} \mathbf{w}_1 \\ \vdots \\ \mathbf{w}_m \end{bmatrix},$$

$$\mathbf{W}^o = \mathit{BlockDiag}\ [\cdots, \mathbf{W}_1, \mathbf{W}_1, \cdots],$$

$$\mathbf{B}^d = \begin{bmatrix} \mathbf{B}_3 & \mathbf{B}_4 & \mathbf{0} & \cdots & \mathbf{0} \\ \mathbf{B}_5 & \mathbf{B}_6 & \ddots & \ddots & \vdots \\ \mathbf{0} & \bar{\mathbf{B}}_5 & \ddots & \ddots & \mathbf{0} \\ \vdots & \ddots & \ddots & \mathbf{B}_6 & \mathbf{B}_4 \\ \mathbf{0} & \ldots & \mathbf{0} & \bar{\mathbf{B}}_5 & \mathbf{B}_8 \end{bmatrix}, \mathbf{B}^o = \begin{bmatrix} \mathbf{B}_1 & \mathbf{B}_2 & \mathbf{0} & \cdots & \mathbf{0} \\ \mathbf{0} & \mathbf{B}_7 & \ddots & \ddots & \vdots \\ \vdots & \ddots & \ddots & \ddots & \mathbf{0} \\ \vdots & & \ddots & \ddots & \mathbf{B}_2 \\ \mathbf{0} & \cdots & \cdots & \mathbf{0} & \mathbf{B}_7 \end{bmatrix}$$

© 2002 by CRC Press LLC

and

$$\mathbf{f}_{ij}^{o} = \begin{bmatrix} \mathbf{f}_5 \\ \mathbf{f}_1 \end{bmatrix}_{ij}, \ \mathbf{f}_{ij}^{d} = \begin{bmatrix} \mathbf{f}_2 \\ \mathbf{f}_3 \\ \mathbf{f}_4 \\ \mathbf{f}_6 \\ \mathbf{f}_7 \\ \mathbf{f}_8 \\ \mathbf{f}_9 \\ \mathbf{f}_{10} \end{bmatrix}_{ij}, \ \mathbf{w}_{ij} = \begin{bmatrix} \mathbf{w}_1 \\ \mathbf{w}_2 \\ \mathbf{w}_3 \\ \mathbf{w}_4 \end{bmatrix}_{ij} \tag{18.16}$$

Now that we have an expression for the forces, let us write the dynamics.

18.3 Dynamics of a Two-Rod Element

Any discussion of rigid body dynamics should properly begin with some decision on how the motion of each body is to be described. A common way to describe rigid body orientation is to use three successive angular rotations to define the orientation of three mutually orthogonal axes fixed in the body. The measure numbers of the angular velocity of the body may then be expressed in terms of these angles and their time derivatives.

This approach must be reconsidered when the body of interest is idealized as a rod. The reason is that the concept of "body fixed axes" becomes ambiguous. Two different sets of axes with a common axis along the rod can be considered equally "body fixed" in the sense that all mass particles of the rod have zero velocity in both sets. This remains true even if relative rotation is allowed along the common axis. The angular velocity of the rod is also ill defined because the component of angular velocity along the rod axis is arbitrary. For these reasons, we are motivated to seek a kinematical description which avoids introducing "body-fixed" reference frames and angular velocity. This objective may be accomplished by describing the configuration of the system in terms of vectors located only the end points of the rods. In this case, no angles are used.

We will use the following notational conventions. Lower case, bold-faced symbols with an underline indicate vector quantities with magnitude and direction in three-dimensional space. These are the usual vector quantities we are familiar with from elementary dynamics. The same bold-faced symbols without an underline indicate a matrix whose elements are scalars. Sometimes we also need to introduce matrices whose elements are vectors. These quantities are indicated with an upper case symbol that is both bold faced and underlined.

As an example of this notation, a position vector can be expressed as

$$\underline{\mathbf{p}}_i = [\underline{\mathbf{e}}_1 \quad \underline{\mathbf{e}}_2 \quad \underline{\mathbf{e}}_3] \begin{bmatrix} p_{i1} \\ p_{i2} \\ p_{i3} \end{bmatrix} = \underline{\mathbf{E}}\mathbf{p}_i .$$

In this expression, $\mathbf{p}_i$ is a column matrix whose elements are the measure numbers of $\underline{\mathbf{p}}_i$ for the mutually orthogonal inertial unit vectors $\underline{\mathbf{e}}_1$, $\underline{\mathbf{e}}_2$, and $\underline{\mathbf{e}}_3$. Similarly, we may represent a force vector $\hat{\underline{\mathbf{f}}}_i$ as

$$\hat{\underline{\mathbf{f}}}_i = \underline{\mathbf{E}}\hat{\mathbf{f}}_i .$$

Matrix notation will be used in most of the development to follow.

© 2002 by CRC Press LLC

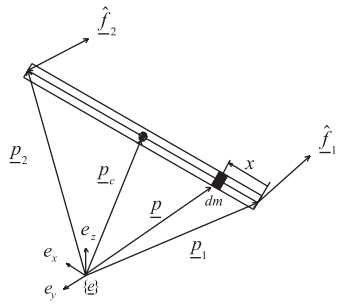

FIGURE 18.8 A single rigid rod.

We now consider a single rod as shown in Figure 18.8 with nodal forces $\hat{\underline{\mathbf{f}}}_1$ and $\hat{\underline{\mathbf{f}}}_2$ applied to the ends of the rod.

The following theorem will be fundamental to our development.

Theorem 18.1 Given a rigid rod of constant mass m and constant length L, the governing equations may be described as:

$$\ddot{\mathbf{q}} + \mathbf{K}\mathbf{q} = \mathbf{H}\tilde{\mathbf{f}} \tag{18.17}$$

where

$$\mathbf{q} = \begin{bmatrix} \mathbf{q}_1 \\ \mathbf{q}_2 \end{bmatrix} = \begin{bmatrix} \mathbf{p}_1 + \mathbf{p}_2 \\ \mathbf{p}_2 - \mathbf{p}_1 \end{bmatrix}$$

$$\tilde{\mathbf{f}} = \begin{bmatrix} \hat{\mathbf{f}}_1 + \hat{\mathbf{f}}_2 \\ \hat{\mathbf{f}}_1 - \hat{\mathbf{f}}_2 \end{bmatrix}, \ \mathbf{H} = \frac{2}{m}\begin{bmatrix} \mathbf{I}_3 & \mathbf{0} \\ \mathbf{0} & \frac{3}{L^2}\tilde{\mathbf{q}}_2^2 \end{bmatrix}, \ \mathbf{K} = \begin{bmatrix} \mathbf{0} & \mathbf{0} \\ \mathbf{0} & L^{-2}\dot{\mathbf{q}}_2^T\dot{\mathbf{q}}_2\mathbf{I}_3 \end{bmatrix}.$$

The notation $\tilde{\mathbf{r}}$ denotes the skew symmetric matrix formed from the elements of $\underline{\mathbf{r}}$:

$$\tilde{\mathbf{r}} = \begin{bmatrix} 0 & -r_3 & r_2 \\ r_3 & 0 & -r_1 \\ -r_2 & r_1 & 0 \end{bmatrix}, \ \mathbf{r} = \begin{bmatrix} r_1 \\ r_2 \\ r_3 \end{bmatrix}$$

and the square of this matrix is

$$\tilde{\mathbf{r}}^2 = \begin{bmatrix} -r_2^2 - r_3^2 & r_1 r_2 & r_1 r_3 \\ r_2 r_1 & -r_1^2 - r_3^2 & r_2 r_3 \\ r_3 r_1 & r_3 r_2 & -r_1^2 - r_2^2 \end{bmatrix}.$$

The matrix elements $\mathbf{r}_1$, $\mathbf{r}_2$, $\mathbf{r}_3$, $\mathbf{q}_1$, $\mathbf{q}_2$, $\mathbf{q}_3$, etc. are to be interpreted as the measure numbers of the corresponding vectors for an orthogonal set of inertially fixed unit vectors $\underline{\mathbf{e}}_1$, $\underline{\mathbf{e}}_2$, and $\underline{\mathbf{e}}_3$. Thus, using the convention introduced earlier,

$$\underline{\mathbf{r}} = \underline{\mathbf{E}}\mathbf{r}, \quad \underline{\mathbf{q}} = \underline{\mathbf{E}}\mathbf{q}, \quad \text{etc.}$$

© 2002 by CRC Press LLC

The proof of Theorem 18.1 is given in Appendix 18.A. This theorem provides the basis of our dynamic model for the shell class of tensegrity structures.

Now consider the dynamics of the two-rod element of the Class 1 tensegrity shell in Figure 18.5. Here, we assume the lengths of the rods are constant. From Theorem 18.1 and Appendix 18.A, the motion equations for the ij unit can be described as

$$\begin{cases} \frac{m_{1ij}}{2}\ddot{\mathbf{q}}_{1ij} = \hat{\mathbf{f}}_{1ij} + \hat{\mathbf{f}}_{2ij} \\ \frac{m_{1ij}}{6}(\mathbf{q}_{2ij} \times \ddot{\mathbf{q}}_{2ij}) = \mathbf{q}_{2ij} \times (\hat{\mathbf{f}}_{2ij} - \hat{\mathbf{f}}_{1ij}) \\ \dot{\mathbf{q}}_{2ij} \cdot \dot{\mathbf{q}}_{2ij} + \mathbf{q}_{2ij} \cdot \ddot{\mathbf{q}}_{2ij} = \mathbf{0} \\ \mathbf{q}_{2ij} \cdot \mathbf{q}_{2ij} = L_{1ij}^2 \end{cases}, \tag{18.18}$$

$$\begin{cases} \frac{m_{2ij}}{2}\ddot{\mathbf{q}}_{3ij} = \hat{\mathbf{f}}_{3ij} + \hat{\mathbf{f}}_{4ij} \\ \frac{m_{2ij}}{6}(\mathbf{q}_{4ij} \times \ddot{\mathbf{q}}_{4ij}) = \mathbf{q}_{4ij} \times (\hat{\mathbf{f}}_{4ij} - \hat{\mathbf{f}}_{3ij}) \\ \dot{\mathbf{q}}_{4ij} \cdot \dot{\mathbf{q}}_{4ij} + \mathbf{q}_{4ij} \cdot \ddot{\mathbf{q}}_{4ij} = \mathbf{0} \\ \mathbf{q}_{4ij} \cdot \mathbf{q}_{4ij} = L_{2ij}^2 \end{cases}, \tag{18.19}$$

where the mass of the rod αij is $m_{\alpha ij}$ and $\|\mathbf{r}_{\alpha ij}\| = L_{\alpha ij}$. As before, we refer everything to a common inertial reference frame ($\underline{\mathbf{E}}$). Hence,

$$\mathbf{q}_{1ij} \triangleq \begin{bmatrix} q_{11ij} \\ q_{12ij} \\ q_{13ij} \end{bmatrix}, \ \mathbf{q}_{2ij} \triangleq \begin{bmatrix} q_{21ij} \\ q_{22ij} \\ q_{23ij} \end{bmatrix}, \ \mathbf{q}_{3ij} \triangleq \begin{bmatrix} q_{31ij} \\ q_{32ij} \\ q_{33ij} \end{bmatrix}, \ \mathbf{q}_{4ij} \triangleq \begin{bmatrix} q_{41ij} \\ q_{42ij} \\ q_{43ij} \end{bmatrix},$$

$$\mathbf{q}_{1ij} \triangleq \begin{bmatrix} \mathbf{q}_{1ij,}^T & \mathbf{q}_{2ij,}^T & \mathbf{q}_{3ij}^T, & \mathbf{q}_{4ij}^T \end{bmatrix}^T,$$

and the force vectors appear in the form

$$\mathbf{H}_{1ij} = \frac{2}{m_{1ij}} \begin{bmatrix} \mathbf{I}_3 & \mathbf{0} \\ \mathbf{0} & \frac{3}{L_{1ij}^2}\tilde{\mathbf{q}}_{2ij}^2 \end{bmatrix}, \ \mathbf{H}_{2ij} = \frac{2}{m_{2ij}} \begin{bmatrix} \mathbf{I}_3 & \mathbf{0} \\ \mathbf{0} & \frac{3}{L_{2ij}^2}\tilde{\mathbf{q}}_{4ij}^2 \end{bmatrix},$$

$$\mathbf{H}_{ij} = \begin{bmatrix} \mathbf{H}_{1ij} & \mathbf{0} \\ \mathbf{0} & \mathbf{H}_{2ij} \end{bmatrix}, \ \mathbf{f}_{ij} \triangleq \begin{bmatrix} \hat{\mathbf{f}}_{1ij} + \hat{\mathbf{f}}_{2ij} \\ \hat{\mathbf{f}}_{1ij} - \hat{\mathbf{f}}_{2ij} \\ \hat{\mathbf{f}}_{3ij} + \hat{\mathbf{f}}_{4ij} \\ \hat{\mathbf{f}}_{3ij} - \hat{\mathbf{f}}_{4ij} \end{bmatrix}.$$

© 2002 by CRC Press LLC

Using Theorem 18.1, the dynamics for the ij unit can be expressed as follows:

$$\ddot{\mathbf{q}}_{ij} + \mathbf{\Omega}_{ij}\mathbf{q}_{ij} = \mathbf{H}_{ij}\mathbf{f}_{ij},$$

where

$$\mathbf{\Omega}_{1ij} = \begin{bmatrix} \mathbf{0} & \mathbf{0} \\ \mathbf{0} & L_{1ij}^{-2}\dot{\mathbf{q}}_{2ij}^{T}\dot{\mathbf{q}}_{2ij}\mathbf{I}_3 \end{bmatrix}, \quad \mathbf{\Omega}_{2ij} = \begin{bmatrix} \mathbf{0} & \mathbf{0} \\ \mathbf{0} & L_{2ij}^{-2}\dot{\mathbf{q}}_{4ij}^{T}\dot{\mathbf{q}}_{4ij}\mathbf{I}_3 \end{bmatrix},$$

$$\mathbf{\Omega}_{ij} = \begin{bmatrix} \mathbf{\Omega}_{1ij} & \mathbf{0} \\ \mathbf{0} & \mathbf{\Omega}_{2ij} \end{bmatrix},$$

$$\mathbf{q} = \left[\mathbf{q}_{11}^{T},\ldots,\mathbf{q}_{n1}^{T},\mathbf{q}_{12}^{T},\ldots,\mathbf{q}_{n2}^{T},\ldots,\mathbf{q}_{1m}^{T},\ldots,\mathbf{q}_{nm}^{T}\right]^{T}.$$

The shell system dynamics are given by

$$\ddot{\mathbf{q}} + \mathbf{K}_r\mathbf{q} = \mathbf{H}\mathbf{f}, \tag{18.20}$$

where $\mathbf{f}$ is defined in (18.15) and

$$\mathbf{q} = \left[\mathbf{q}_{11}^{T},\ldots,\mathbf{q}_{n1}^{T},\mathbf{q}_{12}^{T},\ldots,\mathbf{q}_{n2}^{T},\ldots,\mathbf{q}_{1m}^{T},\ldots,\mathbf{q}_{nm}^{T}\right]^{T},$$

$$\mathbf{K}_r = BlockDiag\left[\mathbf{\Omega}_{11},\ldots,\mathbf{\Omega}_{n1},\mathbf{\Omega}_{12},\ldots,\mathbf{\Omega}_{n2},\ldots,\mathbf{\Omega}_{1m},\ldots,\mathbf{\Omega}_{nm}\right],$$

$$\mathbf{H} = BlockDiag\left[\mathbf{H}_{11},\ldots,\mathbf{H}_{n1},\mathbf{H}_{12},\ldots,\mathbf{H}_{n2},\ldots,\mathbf{H}_{1m},\ldots,\mathbf{H}_{nm}\right].$$

18.4 Choice of Independent Variables and Coordinate Transformations

Tendon vectors $t_{\alpha\beta\gamma}$ are needed to express the forces. Hence, the dynamical model will be completed by expressing the tendon forces, $\mathbf{f}$, in terms of variables $\mathbf{q}$. From Figures 18.6 and 18.9, it follows that vectors $\hat{\boldsymbol{\rho}}_{ij}$ and $\boldsymbol{\rho}_{ij}$ can be described by

$$\boldsymbol{\rho}_{ij} = \boldsymbol{\rho}_{11} + \sum_{k=1}^{i}\mathbf{r}_{1k1} - \sum_{k=1}^{i-1}\mathbf{t}_{1k1} + \sum_{k=2}^{j}\mathbf{t}_{1ik} + \sum_{k=1}^{j-1}\mathbf{t}_{5ik} - \mathbf{r}_{1ij} \tag{18.21}$$

$$\hat{\boldsymbol{\rho}}_{ij} = \boldsymbol{\rho}_{ij} + \mathbf{r}_{1ij} + \mathbf{t}_{5ij} - \mathbf{r}_{2ij}. \tag{18.22}$$

To describe the geometry, we choose the independent vectors $\{\mathbf{r}_{1ij}, \mathbf{r}_{2ij}, \mathbf{t}_{5ij}$, for $i = 1, 2, \ldots, n$, $j = 1, 2, \ldots, m\}$ and $\{\boldsymbol{\rho}_{11}, \mathbf{t}_{1ij}$, for $i = 1, 2, \ldots, n$, $j = 1, 2, \ldots, m$, and $i < n$ when $j = 1\}$.

This section discusses the relationship between the $\mathbf{q}$ variables and the string and rod vectors $\mathbf{t}_{\alpha\beta\gamma}$ and $\mathbf{r}_{\beta ij}$. From Figures 18.5 and 18.6, the position vectors from the origin of the reference frame, E, to the nodal points, $\mathbf{p}_{1ij}$, $\mathbf{p}_{2ij}$, $\mathbf{p}_{3ij}$, and $\mathbf{p}_{4ij}$, can be described as follows:

© 2002 by CRC Press LLC

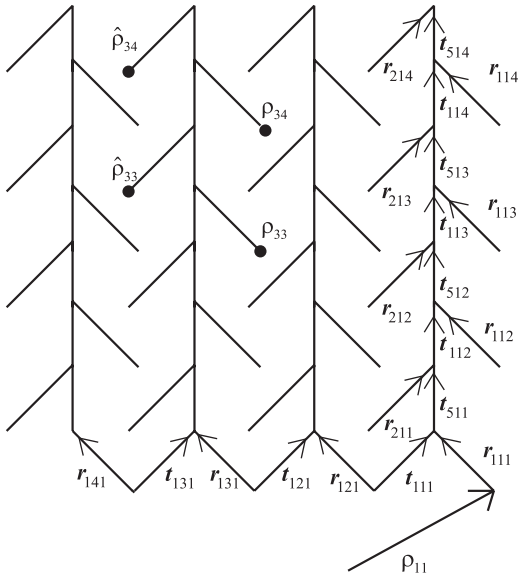

FIGURE 18.9 Choice of independent variables.

$$\begin{cases} \mathbf{p}_{1ij} = \boldsymbol{\rho}_{ij} \\ \mathbf{p}_{2ij} = \boldsymbol{\rho}_{ij} + \mathbf{r}_{1ij} \\ \mathbf{p}_{3ij} = \hat{\boldsymbol{\rho}}_{ij} \\ \mathbf{p}_{4ij} = \hat{\boldsymbol{\rho}}_{ij} + \mathbf{r}_{2ij} \end{cases} \tag{18.23}$$

We define

$$\begin{cases} \mathbf{q}_{1ij} \triangleq \mathbf{p}_{2ij} + \mathbf{p}_{1ij} = 2\boldsymbol{\rho}_{ij} + \mathbf{r}_{1ij} \\ \mathbf{q}_{2ij} \triangleq \mathbf{p}_{2ij} - \mathbf{p}_{1ij} = \mathbf{r}_{1ij} \\ \mathbf{q}_{3ij} \triangleq \mathbf{p}_{4ij} + \mathbf{p}_{3ij} = 2\hat{\boldsymbol{\rho}}_{1ij} + \mathbf{r}_{2ij} \\ \mathbf{q}_{4ij} \triangleq \mathbf{p}_{4ij} - \mathbf{p}_{3ij} = \mathbf{r}_{2ij} \end{cases} \tag{18.24}$$

Then,

$$\begin{aligned} \mathbf{q}_{ij} \triangleq \begin{bmatrix} \mathbf{q}_1 \\ \mathbf{q}_2 \\ \mathbf{q}_3 \\ \mathbf{q}_4 \end{bmatrix}_{ij} &= \begin{bmatrix} \mathbf{I}_3 & \mathbf{I}_3 & \mathbf{0} & \mathbf{0} \\ -\mathbf{I}_3 & \mathbf{I}_3 & \mathbf{0} & \mathbf{0} \\ \mathbf{0} & \mathbf{0} & \mathbf{I}_3 & \mathbf{I}_3 \\ \mathbf{0} & \mathbf{0} & -\mathbf{I}_3 & \mathbf{I}_3 \end{bmatrix} \begin{bmatrix} \mathbf{p}_1 \\ \mathbf{p}_2 \\ \mathbf{p}_3 \\ \mathbf{p}_4 \end{bmatrix}_{ij} \\ &= \begin{bmatrix} 2\mathbf{I}_3 & \mathbf{I}_3 & \mathbf{0} & \mathbf{0} \\ \mathbf{0} & \mathbf{I}_3 & \mathbf{0} & \mathbf{0} \\ \mathbf{0} & \mathbf{0} & 2\mathbf{I}_3 & \mathbf{I}_3 \\ \mathbf{0} & \mathbf{0} & \mathbf{0} & \mathbf{I}_3 \end{bmatrix}_{ij} \begin{bmatrix} \boldsymbol{\rho} \\ \mathbf{r}_1 \\ \hat{\boldsymbol{\rho}} \\ \mathbf{r}_2 \end{bmatrix}_{ij} \end{aligned} \tag{18.25}$$

© 2002 by CRC Press LLC

In shape control, we will later be interested in the **p** vector to describe all nodal points of the structure. This relation is

$$\mathbf{p} = \mathbf{P}\mathbf{q} \quad \mathbf{P} = \mathit{BlockDiag}\ [\ldots,\mathbf{P}_1,\ \ldots,\mathbf{P}_1,\ldots] \tag{18.26}$$

$$\mathbf{P}_1 \triangleq \begin{bmatrix} \mathbf{I}_3 & \mathbf{I}_3 & \mathbf{0} & \mathbf{0} \\ -\mathbf{I}_3 & \mathbf{I}_3 & \mathbf{0} & \mathbf{0} \\ \mathbf{0} & \mathbf{0} & \mathbf{I}_3 & \mathbf{I}_3 \\ \mathbf{0} & \mathbf{0} & -\mathbf{I}_3 & \mathbf{I}_3 \end{bmatrix}^{-1} = \frac{1}{2}\begin{bmatrix} \mathbf{I}_3 & -\mathbf{I}_3 & \mathbf{0} & \mathbf{0} \\ \mathbf{I}_3 & \mathbf{I}_3 & \mathbf{0} & \mathbf{0} \\ \mathbf{0} & \mathbf{0} & \mathbf{I}_3 & -\mathbf{I}_3 \\ \mathbf{0} & \mathbf{0} & \mathbf{I}_3 & \mathbf{I}_3 \end{bmatrix}$$

The equations of motion will be written in the **q** coordinates. Substitution of (18.21) and (18.22) into (18.24) yields the relationship between **q** and the independent variables $\mathbf{t}_5$, $\mathbf{t}_1$, $\mathbf{r}_1$, $\mathbf{r}_2$ as follows:

$$\begin{aligned}
\mathbf{q}_{1ij} &= 2\left[\boldsymbol{\rho}_{11} + \sum_{k=1}^{i}\mathbf{r}_{1k1} - \sum_{k=1}^{i-1}\mathbf{t}_{1k1} + \sum_{k=2}^{j}\mathbf{t}_{1ik} + \sum_{k=1}^{j-1}\mathbf{t}_{5ik}\right] - \mathbf{r}_{1ij} \\
\mathbf{q}_{2ij} &= \mathbf{r}_{1ij} \\
\mathbf{q}_{3ij} &= 2\left[\boldsymbol{\rho}_{11} + \sum_{k=1}^{i}\mathbf{r}_{1k1} - \sum_{k=1}^{i-1}\mathbf{t}_{1k1} + \sum_{k=2}^{j}\mathbf{t}_{1ik} + \sum_{k=1}^{j}\mathbf{t}_{5ik}\right] - \mathbf{r}_{2ij} \\
\mathbf{q}_{4ij} &= \mathbf{r}_{2ij}
\end{aligned} \tag{18.27}$$

To put (18.27) in a matrix form, define the matrices:

$$\mathbf{l}_{ij} = \begin{bmatrix} \mathbf{r}_{1ij} \\ \mathbf{r}_{2ij} \\ \mathbf{t}_{5ij} \\ \mathbf{t}_{1ij} \end{bmatrix} \text{for } j = 2,\ 3,\ldots,\ m,$$

$$\mathbf{l}_{11} = \begin{bmatrix} \boldsymbol{\rho}_{11} \\ \mathbf{r}_{111} \\ \mathbf{r}_{211} \\ \mathbf{t}_{511} \end{bmatrix},\ \mathbf{l}_{i1} = \begin{bmatrix} \mathbf{t}_{1(i\text{-}1)1} \\ \mathbf{r}_{1i1} \\ \mathbf{r}_{2i1} \\ \mathbf{t}_{5i1} \end{bmatrix} \text{for } i = 2,\ldots,\ n,$$

and

$$\mathbf{l} = \left[\mathbf{l}_{11}^T,\ \mathbf{l}_{21}^T,\ \ldots,\ \mathbf{l}_{n1}^T,\ \mathbf{l}_{12}^T,\ \ldots,\ \mathbf{l}_{n2}^T,\ \ldots,\ \mathbf{l}_{1m}^T,\ \ldots,\ \mathbf{l}_{nm}^T\right]^T,$$

$$\mathbf{A} = \begin{bmatrix} 2\mathbf{I}_3 & \mathbf{I}_3 & \mathbf{0} & \mathbf{0} \\ \mathbf{0} & \mathbf{I}_3 & \mathbf{0} & \mathbf{0} \\ 2\mathbf{I}_3 & 2\mathbf{I}_3 & -\mathbf{I}_3 & 2\mathbf{I}_3 \\ \mathbf{0} & \mathbf{0} & \mathbf{I}_3 & \mathbf{0} \end{bmatrix},\ \mathbf{B} = \begin{bmatrix} -2\mathbf{I}_3 & \mathbf{I}_3 & \mathbf{0} & \mathbf{0} \\ \mathbf{0} & \mathbf{I}_3 & \mathbf{0} & \mathbf{0} \\ -2\mathbf{I}_3 & 2\mathbf{I}_3 & -\mathbf{I}_3 & 2\mathbf{I}_3 \\ \mathbf{0} & \mathbf{0} & \mathbf{I}_3 & \mathbf{0} \end{bmatrix}$$

© 2002 by CRC Press LLC

$$\mathbf{C} = \begin{bmatrix} -\mathbf{I}_3 & \mathbf{0} & \mathbf{0} & 2\mathbf{I}_3 \\ \mathbf{I}_3 & \mathbf{0} & \mathbf{0} & \mathbf{0} \\ \mathbf{0} & -\mathbf{I}_3 & 2\mathbf{I}_3 & 2\mathbf{I}_3 \\ \mathbf{0} & \mathbf{I}_3 & \mathbf{0} & \mathbf{0} \end{bmatrix}, \quad \mathbf{D} = \begin{bmatrix} 2\mathbf{I}_3 & 2\mathbf{I}_3 & \mathbf{0} & \mathbf{0} \\ \mathbf{0} & \mathbf{0} & \mathbf{0} & \mathbf{0} \\ 2\mathbf{I}_3 & 2\mathbf{I}_3 & \mathbf{0} & \mathbf{0} \\ \mathbf{0} & \mathbf{0} & \mathbf{0} & \mathbf{0} \end{bmatrix}$$

$$\mathbf{E} = \begin{bmatrix} -2\mathbf{I}_3 & 2\mathbf{I}_3 & \mathbf{0} & \mathbf{0} \\ \mathbf{0} & \mathbf{0} & \mathbf{0} & \mathbf{0} \\ -2\mathbf{I}_3 & 2\mathbf{I}_3 & \mathbf{0} & \mathbf{0} \\ \mathbf{0} & \mathbf{0} & \mathbf{0} & \mathbf{0} \end{bmatrix}, \quad \mathbf{F} = \begin{bmatrix} 2\mathbf{I}_3 & 2\mathbf{I}_3 & \mathbf{0} & 2\mathbf{I}_3 \\ \mathbf{0} & \mathbf{0} & \mathbf{0} & \mathbf{0} \\ 2\mathbf{I}_3 & 2\mathbf{I}_3 & \mathbf{0} & 2\mathbf{I}_3 \\ \mathbf{0} & \mathbf{0} & \mathbf{0} & \mathbf{0} \end{bmatrix}$$

$$\mathbf{J} = \begin{bmatrix} \mathbf{0} & \mathbf{0} & 2\mathbf{I}_3 & 2\mathbf{I}_3 \\ \mathbf{0} & \mathbf{0} & \mathbf{0} & \mathbf{0} \\ \mathbf{0} & \mathbf{0} & 2\mathbf{I}_3 & 2\mathbf{I}_3 \\ \mathbf{0} & \mathbf{0} & \mathbf{0} & \mathbf{0} \end{bmatrix}, \quad \mathbf{G} = \begin{bmatrix} -2\mathbf{I}_3 & 2\mathbf{I}_3 & \mathbf{0} & 2\mathbf{I}_3 \\ \mathbf{0} & \mathbf{0} & \mathbf{0} & \mathbf{0} \\ 2\mathbf{I}_3 & 2\mathbf{I}_3 & \mathbf{0} & 2\mathbf{I}_3 \\ \mathbf{0} & \mathbf{0} & \mathbf{0} & \mathbf{0} \end{bmatrix}$$

Then (18.27) can be written simply

$$\mathbf{q} = \mathbf{Q}\mathbf{l}, \tag{18.28}$$

where the $12nm \times 12nm$ matrix $\mathbf{Q}$ is composed of the 12×12 matrices A–H as follows:

$$\mathbf{Q} = \begin{bmatrix} \mathbf{Q}_{11} & \mathbf{0} & \cdots & \cdots & \mathbf{0} & \\ \mathbf{Q}_{21} & \mathbf{Q}_{22} & \ddots & & \vdots & \\ \mathbf{Q}_{21} & \mathbf{Q}_{32} & \mathbf{Q}_{22} & \ddots & \vdots & \\ \mathbf{Q}_{21} & \mathbf{Q}_{32} & \mathbf{Q}_{32} & \mathbf{Q}_{22} & \mathbf{0} & \\ \mathbf{Q}_{21} & \mathbf{Q}_{32} & \mathbf{Q}_{32} & \mathbf{Q}_{32} & \mathbf{Q}_{22} & \\ \vdots & \vdots & \vdots & \vdots & \ddots & \ddots \end{bmatrix}, \tag{18.29}$$

$$\mathbf{Q}_{11} = \left.\begin{bmatrix} \mathbf{A} & \mathbf{0} & \cdots & \cdots & \cdots & \mathbf{0} \\ \mathbf{D} & \mathbf{B} & \ddots & & & \vdots \\ \mathbf{D} & \mathbf{E} & \mathbf{B} & \ddots & & \vdots \\ \mathbf{D} & \mathbf{E} & \mathbf{E} & \mathbf{B} & \ddots & \vdots \\ \vdots & \vdots & \vdots & \ddots & \ddots & 0 \\ \mathbf{D} & \mathbf{E} & \mathbf{E} & \cdots & \mathbf{E} & \mathbf{B} \end{bmatrix}\right\} n \times n \text{ blocks of } 12 \times 12 \text{ matrices,}$$

$$\mathbf{Q}_{21} = \left.\begin{bmatrix} \mathbf{F} & \mathbf{0} & \cdots & \cdots & \cdots & \mathbf{0} \\ \mathbf{D} & \mathbf{G} & \ddots & & & \vdots \\ \mathbf{D} & \mathbf{E} & \mathbf{G} & \ddots & & \vdots \\ \mathbf{D} & \mathbf{E} & \mathbf{E} & \ddots & \ddots & \vdots \\ \vdots & \vdots & \vdots & \ddots & \ddots & \mathbf{0} \\ \mathbf{D} & \mathbf{E} & \mathbf{E} & \mathbf{E} & \mathbf{E} & \mathbf{G} \end{bmatrix}\right\} 12n \times 12n \text{ matrix,}$$

$\mathbf{Q}_{22} = \mathit{BlockDiag}\ [\ldots,\mathbf{C}, \ldots,\mathbf{C}]$,

$\mathbf{Q}_{32} = \mathit{BlockDiag}\ [\ldots,\mathbf{J}, \ldots,\mathbf{J}]$,

© 2002 by CRC Press LLC

where each $\mathbf{Q}_{ij}$ is $12n \times 12n$ and there are m row blocks and m column blocks in $\mathbf{Q}$. Appendix 18.B provides an explicit expression for the inverse matrix $\mathbf{Q}$, which will be needed later to express the tendon forces in terms of $\mathbf{q}$.

Equation (18.28) provides the relationship between the selected generalized coordinates and an independent set of the tendon and rod vectors forming $\mathbf{l}$. All remaining tendon vectors may be written as a linear combination of $\mathbf{l}$. This relation will now be established. The following equations are written by inspection of Figures 18.5, 18.6, and 18.7 where

$$\mathbf{t}_{1n1} = \boldsymbol{\rho}_{n1} + \mathbf{r}_{1n1} - \boldsymbol{\rho}_{11} \tag{18.30}$$

and for $i = 1, 2, \ldots, n$, $j = 1, 2, \ldots, m$ we have

$$\begin{aligned}
\mathbf{t}_{2ij} &= \boldsymbol{\rho}_{ij} - (\hat{\boldsymbol{\rho}}_{i(j-1)} + \mathbf{r}_{2i(j-1)}), \quad (j > 1) \\
\mathbf{t}_{3ij} &= \hat{\boldsymbol{\rho}}_{(i-1)j} - \boldsymbol{\rho}_{ij} \\
\mathbf{t}_{4ij} &= -\mathbf{t}_{3ij} + \mathbf{r}_{1ij} = \boldsymbol{\rho}_{ij} + \mathbf{r}_{1ij} - \hat{\boldsymbol{\rho}}_{(i-1)j} \\
\mathbf{t}_{6ij} &= \boldsymbol{\rho}_{(i+1)(j+1)} - (\hat{\boldsymbol{\rho}}_{ij} + \mathbf{r}_{2ij}) \quad , \quad (j < m) \\
\mathbf{t}_{7ij} &= \hat{\boldsymbol{\rho}}_{ij} - \boldsymbol{\rho}_{(i+1)(j+1)} \quad , \quad (j < m) \\
\mathbf{t}_{8ij} &= \boldsymbol{\rho}_{ij} + \mathbf{r}_{1ij} - \hat{\boldsymbol{\rho}}_{ij} = -\mathbf{r}_{1ij} - \mathbf{t}_{5ij} + \mathbf{r}_{2ij} \\
\mathbf{t}_{9ij} &= \boldsymbol{\rho}_{(i+1)j} - (\boldsymbol{\rho}_{ij} + \mathbf{r}_{1ij}) \\
\mathbf{t}_{10ij} &= \hat{\boldsymbol{\rho}}_{(i+1)j} + \mathbf{r}_{2(i+1)j} - \hat{\boldsymbol{\rho}}_{ij}.
\end{aligned} \tag{18.31}$$

For $j = 1$ we replace $\mathbf{t}_{2ij}$ with

$$\mathbf{t}_{2i1} = \boldsymbol{\rho}_{i1} - \boldsymbol{\rho}_{(i+1)1}.$$

For $j = m$ we replace $\mathbf{t}_{6ij}$ and $\mathbf{t}_{7ij}$ with

$$\begin{aligned}
\mathbf{t}_{6im} &= \hat{\boldsymbol{\rho}}_{(i+1)m} + \mathbf{r}_{2(i+1)m} - (\hat{\boldsymbol{\rho}}_{im} + \mathbf{r}_{2im}) \\
\mathbf{t}_{7im} &= \hat{\boldsymbol{\rho}}_{im} - (\hat{\boldsymbol{\rho}}_{(i+1)m} + \mathbf{r}_{2(i+1)m}).
\end{aligned}$$

where $\boldsymbol{\rho}_{0j} \triangleq \boldsymbol{\rho}_{nj}$, $\hat{\boldsymbol{\rho}}_{oj} \triangleq \hat{\boldsymbol{\rho}}_{nj}$, and $i + n = i$. Equation (18.31) has the matrix form,

$$\mathbf{t}_{ij}^{d} \triangleq \begin{bmatrix} \mathbf{t}_2 \\ \mathbf{t}_3 \\ \mathbf{t}_4 \\ \mathbf{t}_6 \\ \mathbf{t}_7 \\ \mathbf{t}_8 \\ \mathbf{t}_9 \\ \mathbf{t}_{10} \end{bmatrix}_{ij} = \begin{bmatrix} \mathbf{0} & \mathbf{0} & -\mathbf{I}_3 & -\mathbf{I}_3 \\ \mathbf{0} & \mathbf{0} & \mathbf{0} & \mathbf{0} \\ \mathbf{0} & \mathbf{0} & \mathbf{0} & \mathbf{0} \\ \mathbf{0} & \mathbf{0} & \mathbf{0} & \mathbf{0} \\ \mathbf{0} & \mathbf{0} & \mathbf{0} & \mathbf{0} \\ \mathbf{0} & \mathbf{0} & \mathbf{0} & \mathbf{0} \\ \mathbf{0} & \mathbf{0} & \mathbf{0} & \mathbf{0} \\ \mathbf{0} & \mathbf{0} & \mathbf{0} & \mathbf{0} \end{bmatrix} \begin{bmatrix} \boldsymbol{\rho} \\ \mathbf{r}_1 \\ \hat{\boldsymbol{\rho}} \\ \mathbf{r}_2 \end{bmatrix}_{i(j-1)} + \begin{bmatrix} \mathbf{0} & \mathbf{0} & \mathbf{0} & \mathbf{0} \\ \mathbf{0} & \mathbf{0} & \mathbf{I}_3 & \mathbf{0} \\ \mathbf{0} & \mathbf{0} & -\mathbf{I}_3 & \mathbf{0} \\ \mathbf{0} & \mathbf{0} & \mathbf{0} & \mathbf{0} \\ \mathbf{0} & \mathbf{0} & \mathbf{0} & \mathbf{0} \\ \mathbf{0} & \mathbf{0} & \mathbf{0} & \mathbf{0} \\ \mathbf{0} & \mathbf{0} & \mathbf{0} & \mathbf{0} \\ \mathbf{0} & \mathbf{0} & \mathbf{0} & \mathbf{0} \end{bmatrix} \begin{bmatrix} \boldsymbol{\rho} \\ \mathbf{r}_1 \\ \hat{\boldsymbol{\rho}} \\ \mathbf{r}_2 \end{bmatrix}_{(i-1)j}$$

© 2002 by CRC Press LLC

$$
+\begin{bmatrix} \mathbf{I}_3 & \mathbf{0} & \mathbf{0} & \mathbf{0} \\ -\mathbf{I}_3 & \mathbf{0} & \mathbf{0} & \mathbf{0} \\ \mathbf{I}_3 & \mathbf{I}_3 & \mathbf{0} & \mathbf{0} \\ \mathbf{0} & \mathbf{0} & -\mathbf{I}_3 & -\mathbf{I}_3 \\ \mathbf{0} & \mathbf{0} & \mathbf{I}_3 & \mathbf{0} \\ \mathbf{I}_3 & \mathbf{I}_3 & -\mathbf{I}_3 & \mathbf{0} \\ -\mathbf{I}_3 & -\mathbf{I}_3 & \mathbf{0} & \mathbf{0} \\ \mathbf{0} & \mathbf{0} & -\mathbf{I}_3 & \mathbf{0} \end{bmatrix} \begin{bmatrix} \boldsymbol{\rho} \\ \mathbf{r}_1 \\ \hat{\boldsymbol{\rho}} \\ \mathbf{r}_2 \end{bmatrix}_{ij} + \begin{bmatrix} \mathbf{0} & \mathbf{0} & \mathbf{0} & \mathbf{0} \\ \mathbf{0} & \mathbf{0} & \mathbf{0} & \mathbf{0} \\ \mathbf{0} & \mathbf{0} & \mathbf{0} & \mathbf{0} \\ \mathbf{0} & \mathbf{0} & \mathbf{0} & \mathbf{0} \\ \mathbf{0} & \mathbf{0} & \mathbf{0} & \mathbf{0} \\ \mathbf{0} & \mathbf{0} & \mathbf{0} & \mathbf{0} \\ \mathbf{I}_3 & \mathbf{0} & \mathbf{0} & \mathbf{0} \\ \mathbf{0} & \mathbf{0} & \mathbf{I}_3 & \mathbf{I}_3 \end{bmatrix} \begin{bmatrix} \boldsymbol{\rho} \\ \mathbf{r}_1 \\ \hat{\boldsymbol{\rho}} \\ \mathbf{r}_2 \end{bmatrix}_{(i+1)j}
$$

$$
+\begin{bmatrix} \mathbf{0} & \mathbf{0} & \mathbf{0} & \mathbf{0} \\ \mathbf{0} & \mathbf{0} & \mathbf{0} & \mathbf{0} \\ \mathbf{0} & \mathbf{0} & \mathbf{0} & \mathbf{0} \\ \mathbf{I}_3 & \mathbf{0} & \mathbf{0} & \mathbf{0} \\ -\mathbf{I}_3 & \mathbf{0} & \mathbf{0} & \mathbf{0} \\ \mathbf{0} & \mathbf{0} & \mathbf{0} & \mathbf{0} \\ \mathbf{0} & \mathbf{0} & \mathbf{0} & \mathbf{0} \\ \mathbf{0} & \mathbf{0} & \mathbf{0} & \mathbf{0} \end{bmatrix} \begin{bmatrix} \boldsymbol{\rho} \\ \mathbf{r}_1 \\ \hat{\boldsymbol{\rho}} \\ \mathbf{r}_2 \end{bmatrix}_{(i+1)(j+1)} ,
$$

$$
\mathbf{t}_{i1}^{d} \triangleq \begin{bmatrix} \mathbf{t}_2 \\ \mathbf{t}_3 \\ \mathbf{t}_4 \\ \mathbf{t}_6 \\ \mathbf{t}_7 \\ \mathbf{t}_8 \\ \mathbf{t}_9 \\ \mathbf{t}_{10} \end{bmatrix}_{i1} = \begin{bmatrix} \mathbf{0} & \mathbf{0} & \mathbf{0} & \mathbf{0} \\ \mathbf{0} & \mathbf{0} & \mathbf{I}_3 & \mathbf{0} \\ \mathbf{0} & \mathbf{0} & -\mathbf{I}_3 & \mathbf{0} \\ \mathbf{0} & \mathbf{0} & \mathbf{0} & \mathbf{0} \\ \mathbf{0} & \mathbf{0} & \mathbf{0} & \mathbf{0} \\ \mathbf{0} & \mathbf{0} & \mathbf{0} & \mathbf{0} \\ \mathbf{0} & \mathbf{0} & \mathbf{0} & \mathbf{0} \\ \mathbf{0} & \mathbf{0} & \mathbf{0} & \mathbf{0} \end{bmatrix} \begin{bmatrix} \boldsymbol{\rho} \\ \mathbf{r}_1 \\ \hat{\boldsymbol{\rho}} \\ \mathbf{r}_2 \end{bmatrix}_{(i-1)1} + \begin{bmatrix} \mathbf{I}_3 & \mathbf{0} & \mathbf{0} & \mathbf{0} \\ -\mathbf{I}_3 & \mathbf{0} & \mathbf{0} & \mathbf{0} \\ \mathbf{I}_3 & \mathbf{I}_3 & \mathbf{0} & \mathbf{0} \\ \mathbf{0} & \mathbf{0} & -\mathbf{I}_3 & -\mathbf{I}_3 \\ \mathbf{0} & \mathbf{0} & \mathbf{I}_3 & \mathbf{0} \\ \mathbf{I}_3 & \mathbf{I}_3 & -\mathbf{I}_3 & \mathbf{0} \\ -\mathbf{I}_3 & -\mathbf{I}_3 & \mathbf{0} & \mathbf{0} \\ \mathbf{0} & \mathbf{0} & -\mathbf{I}_3 & \mathbf{0} \end{bmatrix} \begin{bmatrix} \boldsymbol{\rho} \\ \mathbf{r}_1 \\ \hat{\boldsymbol{\rho}} \\ \mathbf{r}_2 \end{bmatrix}_{i1} \tag{18.32}
$$

$$
+\begin{bmatrix} -\mathbf{I}_3 & \mathbf{0} & \mathbf{0} & \mathbf{0} \\ \mathbf{0} & \mathbf{0} & \mathbf{0} & \mathbf{0} \\ \mathbf{0} & \mathbf{0} & \mathbf{0} & \mathbf{0} \\ \mathbf{0} & \mathbf{0} & \mathbf{0} & \mathbf{0} \\ \mathbf{0} & \mathbf{0} & \mathbf{0} & \mathbf{0} \\ \mathbf{0} & \mathbf{0} & \mathbf{0} & \mathbf{0} \\ \mathbf{I}_3 & \mathbf{0} & \mathbf{0} & \mathbf{0} \\ \mathbf{0} & \mathbf{0} & \mathbf{I}_3 & \mathbf{I}_3 \end{bmatrix} \begin{bmatrix} \boldsymbol{\rho} \\ \mathbf{r}_1 \\ \hat{\boldsymbol{\rho}} \\ \mathbf{r}_2 \end{bmatrix}_{(i+1)1} + \begin{bmatrix} \mathbf{0} & \mathbf{0} & \mathbf{0} & \mathbf{0} \\ \mathbf{0} & \mathbf{0} & \mathbf{0} & \mathbf{0} \\ \mathbf{0} & \mathbf{0} & \mathbf{0} & \mathbf{0} \\ \mathbf{I}_3 & \mathbf{0} & \mathbf{0} & \mathbf{0} \\ -\mathbf{I}_3 & \mathbf{0} & \mathbf{0} & \mathbf{0} \\ \mathbf{0} & \mathbf{0} & \mathbf{0} & \mathbf{0} \\ \mathbf{0} & \mathbf{0} & \mathbf{0} & \mathbf{0} \\ \mathbf{0} & \mathbf{0} & \mathbf{0} & \mathbf{0} \end{bmatrix} \begin{bmatrix} \boldsymbol{\rho} \\ \mathbf{r}_1 \\ \hat{\boldsymbol{\rho}} \\ \mathbf{r}_2 \end{bmatrix}_{(i+1)2} ,
$$

© 2002 by CRC Press LLC

$$
\mathbf{t}_{im}^{d} \triangleq \begin{bmatrix} \mathbf{t}_2 \\ \mathbf{t}_3 \\ \mathbf{t}_4 \\ \mathbf{t}_6 \\ \mathbf{t}_7 \\ \mathbf{t}_8 \\ \mathbf{t}_9 \\ \mathbf{t}_{10} \end{bmatrix}_{im} = \begin{bmatrix} \mathbf{0} & \mathbf{0} & -\mathbf{I}_3 & -\mathbf{I}_3 \\ \mathbf{0} & \mathbf{0} & \mathbf{0} & \mathbf{0} \\ \mathbf{0} & \mathbf{0} & \mathbf{0} & \mathbf{0} \\ \mathbf{0} & \mathbf{0} & \mathbf{0} & \mathbf{0} \\ \mathbf{0} & \mathbf{0} & \mathbf{0} & \mathbf{0} \\ \mathbf{0} & \mathbf{0} & \mathbf{0} & \mathbf{0} \\ \mathbf{0} & \mathbf{0} & \mathbf{0} & \mathbf{0} \\ \mathbf{0} & \mathbf{0} & \mathbf{0} & \mathbf{0} \end{bmatrix} \begin{bmatrix} \boldsymbol{\rho} \\ \mathbf{r}_1 \\ \hat{\boldsymbol{\rho}} \\ \mathbf{r}_2 \end{bmatrix}_{i(m-1)} + \begin{bmatrix} \mathbf{0} & \mathbf{0} & \mathbf{0} & \mathbf{0} \\ \mathbf{0} & \mathbf{0} & \mathbf{I}_3 & \mathbf{0} \\ \mathbf{0} & \mathbf{0} & -\mathbf{I}_3 & \mathbf{0} \\ \mathbf{0} & \mathbf{0} & \mathbf{0} & \mathbf{0} \\ \mathbf{0} & \mathbf{0} & \mathbf{0} & \mathbf{0} \\ \mathbf{0} & \mathbf{0} & \mathbf{0} & \mathbf{0} \\ \mathbf{0} & \mathbf{0} & \mathbf{0} & \mathbf{0} \\ \mathbf{0} & \mathbf{0} & \mathbf{0} & \mathbf{0} \end{bmatrix} \begin{bmatrix} \boldsymbol{\rho} \\ \mathbf{r}_1 \\ \hat{\boldsymbol{\rho}} \\ \mathbf{r}_2 \end{bmatrix}_{(i-1)m}
$$

$$
+ \begin{bmatrix} \mathbf{I}_3 & \mathbf{0} & \mathbf{0} & \mathbf{0} \\ -\mathbf{I}_3 & \mathbf{0} & \mathbf{0} & \mathbf{0} \\ \mathbf{I}_3 & \mathbf{I}_3 & \mathbf{0} & \mathbf{0} \\ \mathbf{0} & \mathbf{0} & -\mathbf{I}_3 & -\mathbf{I}_3 \\ \mathbf{0} & \mathbf{0} & \mathbf{I}_3 & \mathbf{0} \\ \mathbf{I}_3 & \mathbf{I}_3 & -\mathbf{I}_3 & \mathbf{0} \\ -\mathbf{I}_3 & -\mathbf{I}_3 & \mathbf{0} & \mathbf{0} \\ \mathbf{0} & \mathbf{0} & -\mathbf{I}_3 & \mathbf{0} \end{bmatrix} \begin{bmatrix} \boldsymbol{\rho} \\ \mathbf{r}_1 \\ \hat{\boldsymbol{\rho}} \\ \mathbf{r}_2 \end{bmatrix}_{im} + \begin{bmatrix} \mathbf{0} & \mathbf{0} & \mathbf{0} & \mathbf{0} \\ \mathbf{0} & \mathbf{0} & \mathbf{0} & \mathbf{0} \\ \mathbf{0} & \mathbf{0} & \mathbf{0} & \mathbf{0} \\ \mathbf{0} & \mathbf{0} & \mathbf{I}_3 & \mathbf{I}_3 \\ \mathbf{0} & \mathbf{0} & -\mathbf{I}_3 & -\mathbf{I}_3 \\ \mathbf{0} & \mathbf{0} & \mathbf{0} & \mathbf{0} \\ \mathbf{I}_3 & \mathbf{0} & \mathbf{0} & \mathbf{0} \\ \mathbf{0} & \mathbf{0} & \mathbf{I}_3 & \mathbf{I}_3 \end{bmatrix} \begin{bmatrix} \boldsymbol{\rho} \\ \mathbf{r}_1 \\ \hat{\boldsymbol{\rho}} \\ \mathbf{r}_2 \end{bmatrix}_{(i+1)m} .
$$

Equation (18.25) yields

$$
\begin{bmatrix} \boldsymbol{\rho} \\ \mathbf{r}_1 \\ \hat{\boldsymbol{\rho}} \\ \mathbf{r}_2 \end{bmatrix}_{ij} = \begin{bmatrix} \frac{1}{2}\mathbf{I}_3 & -\frac{1}{2}\mathbf{I}_3 & \mathbf{0} & \mathbf{0} \\ \mathbf{0} & \mathbf{I}_3 & \mathbf{0} & \mathbf{0} \\ \mathbf{0} & \mathbf{0} & \frac{1}{2}\mathbf{I}_3 & -\frac{1}{2}\mathbf{I}_3 \\ \mathbf{0} & \mathbf{0} & \mathbf{0} & \mathbf{I}_3 \end{bmatrix} \mathbf{q}_{ij} \tag{18.33}
$$

Hence, (18.32) and (18.33) yield

$$
\mathbf{t}_{ij}^{d} \triangleq \begin{bmatrix} \mathbf{t}_2 \\ \mathbf{t}_3 \\ \mathbf{t}_4 \\ \mathbf{t}_6 \\ \mathbf{t}_7 \\ \mathbf{t}_8 \\ \mathbf{t}_9 \\ \mathbf{t}_{10} \end{bmatrix}_{ij} = \frac{1}{2} \begin{bmatrix} \mathbf{0} & \mathbf{0} & -\mathbf{I}_3 & -\mathbf{I}_3 \\ \mathbf{0} & \mathbf{0} & \mathbf{0} & \mathbf{0} \\ \mathbf{0} & \mathbf{0} & \mathbf{0} & \mathbf{0} \\ \mathbf{0} & \mathbf{0} & \mathbf{0} & \mathbf{0} \\ \mathbf{0} & \mathbf{0} & \mathbf{0} & \mathbf{0} \\ \mathbf{0} & \mathbf{0} & \mathbf{0} & \mathbf{0} \\ \mathbf{0} & \mathbf{0} & \mathbf{0} & \mathbf{0} \\ \mathbf{0} & \mathbf{0} & \mathbf{0} & \mathbf{0} \end{bmatrix} \mathbf{q}_{i(j-1)} + \frac{1}{2} \begin{bmatrix} \mathbf{0} & \mathbf{0} & \mathbf{0} & \mathbf{0} \\ \mathbf{0} & \mathbf{0} & \mathbf{I}_3 & -\mathbf{I}_3 \\ \mathbf{0} & \mathbf{0} & -\mathbf{I}_3 & \mathbf{I}_3 \\ \mathbf{0} & \mathbf{0} & \mathbf{0} & \mathbf{0} \\ \mathbf{0} & \mathbf{0} & \mathbf{0} & \mathbf{0} \\ \mathbf{0} & \mathbf{0} & \mathbf{0} & \mathbf{0} \\ \mathbf{0} & \mathbf{0} & \mathbf{0} & \mathbf{0} \\ \mathbf{0} & \mathbf{0} & \mathbf{0} & \mathbf{0} \end{bmatrix} \mathbf{q}_{(i-1)j}
$$

© 2002 by CRC Press LLC

$$+\frac{1}{2}\begin{bmatrix} \mathbf{I}_3 & -\mathbf{I}_3 & \mathbf{0} & \mathbf{0} \\ -\mathbf{I}_3 & \mathbf{I}_3 & \mathbf{0} & \mathbf{0} \\ \mathbf{I}_3 & \mathbf{I}_3 & \mathbf{0} & \mathbf{0} \\ \mathbf{0} & \mathbf{0} & -\mathbf{I}_3 & -\mathbf{I}_3 \\ \mathbf{0} & \mathbf{0} & \mathbf{I}_3 & -\mathbf{I}_3 \\ \mathbf{I}_3 & \mathbf{I}_3 & -\mathbf{I}_3 & \mathbf{I}_3 \\ -\mathbf{I}_3 & -\mathbf{I}_3 & \mathbf{0} & \mathbf{0} \\ \mathbf{0} & \mathbf{0} & -\mathbf{I}_3 & \mathbf{I}_3 \end{bmatrix}\mathbf{q}_{ij}+\frac{1}{2}\begin{bmatrix} \mathbf{0} & \mathbf{0} & \mathbf{0} & \mathbf{0} \\ \mathbf{0} & \mathbf{0} & \mathbf{0} & \mathbf{0} \\ \mathbf{0} & \mathbf{0} & \mathbf{0} & \mathbf{0} \\ \mathbf{0} & \mathbf{0} & \mathbf{0} & \mathbf{0} \\ \mathbf{0} & \mathbf{0} & \mathbf{0} & \mathbf{0} \\ \mathbf{0} & \mathbf{0} & \mathbf{0} & \mathbf{0} \\ \mathbf{I}_3 & -\mathbf{I}_3 & \mathbf{0} & \mathbf{0} \\ \mathbf{0} & \mathbf{0} & \mathbf{I}_3 & \mathbf{I}_3 \end{bmatrix}\mathbf{q}_{(i+1)j}$$

$$+\frac{1}{2}\begin{bmatrix} \mathbf{0} & \mathbf{0} & \mathbf{0} & \mathbf{0} \\ \mathbf{0} & \mathbf{0} & \mathbf{0} & \mathbf{0} \\ \mathbf{0} & \mathbf{0} & \mathbf{0} & \mathbf{0} \\ \mathbf{I}_3 & -\mathbf{I}_3 & \mathbf{0} & \mathbf{0} \\ -\mathbf{I}_3 & \mathbf{I}_3 & \mathbf{0} & \mathbf{0} \\ \mathbf{0} & \mathbf{0} & \mathbf{0} & \mathbf{0} \\ \mathbf{0} & \mathbf{0} & \mathbf{0} & \mathbf{0} \\ \mathbf{0} & \mathbf{0} & \mathbf{0} & \mathbf{0} \end{bmatrix}\mathbf{q}_{(i+1)(j+1)},$$

$$\mathbf{t}_{i1}^{d} \triangleq \begin{bmatrix} \mathbf{t}_2 \\ \mathbf{t}_3 \\ \mathbf{t}_4 \\ \mathbf{t}_6 \\ \mathbf{t}_7 \\ \mathbf{t}_8 \\ \mathbf{t}_9 \\ \mathbf{t}_{10} \end{bmatrix}_{i1} = \frac{1}{2}\begin{bmatrix} \mathbf{0} & \mathbf{0} & \mathbf{0} & \mathbf{0} \\ \mathbf{0} & \mathbf{0} & \mathbf{I}_3 & -\mathbf{I}_3 \\ \mathbf{0} & \mathbf{0} & -\mathbf{I}_3 & \mathbf{I}_3 \\ \mathbf{0} & \mathbf{0} & \mathbf{0} & \mathbf{0} \\ \mathbf{0} & \mathbf{0} & \mathbf{0} & \mathbf{0} \\ \mathbf{0} & \mathbf{0} & \mathbf{0} & \mathbf{0} \\ \mathbf{0} & \mathbf{0} & \mathbf{0} & \mathbf{0} \\ \mathbf{0} & \mathbf{0} & \mathbf{0} & \mathbf{0} \end{bmatrix}\mathbf{q}_{(i-1)1}+\frac{1}{2}\begin{bmatrix} \mathbf{I}_3 & -\mathbf{I}_3 & \mathbf{0} & \mathbf{0} \\ -\mathbf{I}_3 & \mathbf{I}_3 & \mathbf{0} & \mathbf{0} \\ \mathbf{I}_3 & \mathbf{I}_3 & \mathbf{0} & \mathbf{0} \\ \mathbf{0} & \mathbf{0} & -\mathbf{I}_3 & -\mathbf{I}_3 \\ \mathbf{0} & \mathbf{0} & \mathbf{I}_3 & -\mathbf{I}_3 \\ \mathbf{I}_3 & \mathbf{I}_3 & -\mathbf{I}_3 & \mathbf{I}_3 \\ -\mathbf{I}_3 & -\mathbf{I}_3 & \mathbf{0} & \mathbf{0} \\ \mathbf{0} & \mathbf{0} & -\mathbf{I}_3 & \mathbf{I}_3 \end{bmatrix}\mathbf{q}_{i1}$$

$$+\frac{1}{2}\begin{bmatrix} -\mathbf{I}_3 & \mathbf{I}_3 & \mathbf{0} & \mathbf{0} \\ \mathbf{0} & \mathbf{0} & \mathbf{0} & \mathbf{0} \\ \mathbf{0} & \mathbf{0} & \mathbf{0} & \mathbf{0} \\ \mathbf{0} & \mathbf{0} & \mathbf{0} & \mathbf{0} \\ \mathbf{0} & \mathbf{0} & \mathbf{0} & \mathbf{0} \\ \mathbf{0} & \mathbf{0} & \mathbf{0} & \mathbf{0} \\ \mathbf{I}_3 & -\mathbf{I}_3 & \mathbf{0} & \mathbf{0} \\ \mathbf{0} & \mathbf{0} & \mathbf{I}_3 & \mathbf{I}_3 \end{bmatrix}\mathbf{q}_{(i+1)1}+\frac{1}{2}\begin{bmatrix} \mathbf{0} & \mathbf{0} & \mathbf{0} & \mathbf{0} \\ \mathbf{0} & \mathbf{0} & \mathbf{0} & \mathbf{0} \\ \mathbf{0} & \mathbf{0} & \mathbf{0} & \mathbf{0} \\ \mathbf{I}_3 & -\mathbf{I}_3 & \mathbf{0} & \mathbf{0} \\ -\mathbf{I}_3 & \mathbf{I}_3 & \mathbf{0} & \mathbf{0} \\ \mathbf{0} & \mathbf{0} & \mathbf{0} & \mathbf{0} \\ \mathbf{0} & \mathbf{0} & \mathbf{0} & \mathbf{0} \\ \mathbf{0} & \mathbf{0} & \mathbf{0} & \mathbf{0} \end{bmatrix}\mathbf{q}_{(i+1)2}, \tag{18.34}$$

© 2002 by CRC Press LLC

$$
\mathbf{t}_{im}^{d} \triangleq \begin{bmatrix} \mathbf{t}_2 \\ \mathbf{t}_3 \\ \mathbf{t}_4 \\ \mathbf{t}_6 \\ \mathbf{t}_7 \\ \mathbf{t}_8 \\ \mathbf{t}_9 \\ \mathbf{t}_{10} \end{bmatrix}_{im} = \frac{1}{2}\begin{bmatrix} \mathbf{0} & \mathbf{0} & -\mathbf{I}_3 & -\mathbf{I}_3 \\ \mathbf{0} & \mathbf{0} & \mathbf{0} & \mathbf{0} \\ \mathbf{0} & \mathbf{0} & \mathbf{0} & \mathbf{0} \\ \mathbf{0} & \mathbf{0} & \mathbf{0} & \mathbf{0} \\ \mathbf{0} & \mathbf{0} & \mathbf{0} & \mathbf{0} \\ \mathbf{0} & \mathbf{0} & \mathbf{0} & \mathbf{0} \\ \mathbf{0} & \mathbf{0} & \mathbf{0} & \mathbf{0} \\ \mathbf{0} & \mathbf{0} & \mathbf{0} & \mathbf{0} \end{bmatrix} \mathbf{q}_{i(m-1)} + \frac{1}{2}\begin{bmatrix} \mathbf{0} & \mathbf{0} & \mathbf{0} & \mathbf{0} \\ \mathbf{0} & \mathbf{0} & \mathbf{I}_3 & -\mathbf{I}_3 \\ \mathbf{0} & \mathbf{0} & -\mathbf{I}_3 & \mathbf{I}_3 \\ \mathbf{0} & \mathbf{0} & \mathbf{0} & \mathbf{0} \\ \mathbf{0} & \mathbf{0} & \mathbf{0} & \mathbf{0} \\ \mathbf{0} & \mathbf{0} & \mathbf{0} & \mathbf{0} \\ \mathbf{0} & \mathbf{0} & \mathbf{0} & \mathbf{0} \\ \mathbf{0} & \mathbf{0} & \mathbf{0} & \mathbf{0} \end{bmatrix} \mathbf{q}_{(i-1)m}
$$

$$
+\frac{1}{2}\begin{bmatrix} \mathbf{I}_3 & -\mathbf{I}_3 & \mathbf{0} & \mathbf{0} \\ -\mathbf{I}_3 & \mathbf{I}_3 & \mathbf{0} & \mathbf{0} \\ \mathbf{I}_3 & \mathbf{I}_3 & \mathbf{0} & \mathbf{0} \\ \mathbf{0} & \mathbf{0} & -\mathbf{I}_3 & -\mathbf{I}_3 \\ \mathbf{0} & \mathbf{0} & \mathbf{I}_3 & -\mathbf{I}_3 \\ \mathbf{I}_3 & \mathbf{I}_3 & -\mathbf{I}_3 & \mathbf{I}_3 \\ -\mathbf{I}_3 & -\mathbf{I}_3 & \mathbf{0} & \mathbf{0} \\ \mathbf{0} & \mathbf{0} & -\mathbf{I}_3 & \mathbf{I}_3 \end{bmatrix} \mathbf{q}_{im} + \frac{1}{2}\begin{bmatrix} \mathbf{0} & \mathbf{0} & \mathbf{0} & \mathbf{0} \\ \mathbf{0} & \mathbf{0} & \mathbf{0} & \mathbf{0} \\ \mathbf{0} & \mathbf{0} & \mathbf{0} & \mathbf{0} \\ \mathbf{0} & \mathbf{0} & \mathbf{I}_3 & \mathbf{I}_3 \\ \mathbf{0} & \mathbf{0} & -\mathbf{I}_3 & -\mathbf{I}_3 \\ \mathbf{0} & \mathbf{0} & \mathbf{0} & \mathbf{0} \\ \mathbf{I}_3 & -\mathbf{I}_3 & \mathbf{0} & \mathbf{0} \\ \mathbf{0} & \mathbf{0} & \mathbf{I}_3 & \mathbf{I}_3 \end{bmatrix} \mathbf{q}_{(i+1)m}.
$$

Also, from (18.30) and (18.32)

$$
\mathbf{t}_{1n1} = \begin{bmatrix} -\mathbf{I}_{3,} & \mathbf{0}, \mathbf{0}, \mathbf{0} \end{bmatrix} \begin{bmatrix} \boldsymbol{\rho} \\ \mathbf{r}_1 \\ \hat{\boldsymbol{\rho}} \\ \mathbf{r}_2 \end{bmatrix}_{11} + \begin{bmatrix} \mathbf{I}_{3,} & \mathbf{I}_{3,} & \mathbf{0}, \mathbf{0} \end{bmatrix} \begin{bmatrix} \boldsymbol{\rho} \\ \mathbf{r}_1 \\ \hat{\boldsymbol{\rho}} \\ \mathbf{r}_2 \end{bmatrix}_{n1}
$$

$$
\begin{aligned}
\mathbf{t}_{1n1} &= \begin{bmatrix} -\tfrac{1}{2}\mathbf{I}_3, \tfrac{1}{2}\mathbf{I}_{3,} & \mathbf{0}, \mathbf{0} \end{bmatrix} \mathbf{q}_{11} + \begin{bmatrix} \tfrac{1}{2}\mathbf{I}_3, \tfrac{1}{2}\mathbf{I}_3, \mathbf{0}, \mathbf{0} \end{bmatrix} \mathbf{q}_{n1}, \\
&= \mathbf{E}_6\mathbf{q}_{11} + \mathbf{E}_7\mathbf{q}_{n1}, \qquad (18.35) \\
&= \begin{bmatrix} \mathbf{E}_6, \mathbf{0}, \cdots, \mathbf{0}, \mathbf{E}_7 \end{bmatrix} \begin{bmatrix} \mathbf{q}_{11} \\ \mathbf{q}_{21} \\ \vdots \\ \mathbf{q}_{n1} \end{bmatrix}, \mathbf{E}_6 \in^{3\times 12}, \mathbf{E}_7 \in \mathbf{R}^{3\times 12}, \\
\mathbf{t}_{1n1} &= \mathbf{R}_0\mathbf{q}_1 = \begin{bmatrix} \mathbf{R}_{0,} & \mathbf{0} \end{bmatrix}\mathbf{q}, \mathbf{R}_0 \in \mathbf{R}^{3\times 12n}.
\end{aligned}
$$

With the obvious definitions of the 24×12 matrices $\mathbf{E}_1$, $\mathbf{E}_2$, $\mathbf{E}_3$, $\mathbf{E}_4$, $\hat{\mathbf{E}}_4$, $\overline{\mathbf{E}}_4$, $\mathbf{E}_5$, equations in (18.34) are written in the form, where $\mathbf{q}_{01} = \mathbf{q}_{n1}$, $\mathbf{q}_{(n+1)j} = \mathbf{q}_{ij}$,

$$
\begin{aligned}
\mathbf{t}_{il}^{d} &= \mathbf{E}_2\mathbf{q}_{(i-1)1} + \mathbf{E}_3\mathbf{q}_{i1} + \hat{\mathbf{E}}_4\mathbf{q}_{(i+1)1} + \mathbf{E}_5\mathbf{q}_{(i+1)2}, \\
\mathbf{t}_{ij}^{d} &= \mathbf{E}_1\mathbf{q}_{i(j-1)} + \mathbf{E}_2\mathbf{q}_{(i-1)j} + \mathbf{E}_3\mathbf{q}_{ij} + \mathbf{E}_4\mathbf{q}_{(i+1)j} + \mathbf{E}_5\mathbf{q}_{(i+1)(j+1)}, \qquad (18.36) \\
\mathbf{t}_{im}^{d} &= \mathbf{E}_1\mathbf{q}_{i(m-1)} + \mathbf{E}_2\mathbf{q}_{(i-1)m} + \mathbf{E}_3\mathbf{q}_{im} + \overline{\mathbf{E}}_4\mathbf{q}_{(i+1)m}.
\end{aligned}
$$

© 2002 by CRC Press LLC

Now from (18.34) and (18.35), define

$$\mathbf{l}^d = \left[\mathbf{t}_{1n1}^{dT}, \mathbf{t}_{11}^{dT}, \mathbf{t}_{21}^{dT}, \ldots, \mathbf{t}_{n1}^{dT} \middle| \mathbf{t}_{12}^{dT}, \ldots, \mathbf{t}_{n2}^{dT} \middle| \ldots, \mathbf{t}_{nm}^{dT}\right]^T$$

$$= \left[\mathbf{t}_{1n1}^{dT}, \mathbf{t}_{1}^{dT}, \mathbf{t}_{2}^{dT}, \ldots, \mathbf{t}_{n}^{dT}\right]^T,$$

to get

$$\mathbf{l}^d = \mathbf{R}\mathbf{q}, \mathbf{R} \in \mathbf{R}^{(24nm+3)\times 12nm}, \mathbf{q} \in \mathbf{R}^{12nm}, \mathbf{l}^d \in \mathbf{R}^{(24nm+3)}, \tag{18.37}$$

$$\mathbf{R} = \begin{bmatrix} \mathbf{R}_0 & \mathbf{0} & \cdots & \cdots & \cdots & \mathbf{0} \\ \hat{\mathbf{R}}_{11} & \mathbf{R}_{12} & \ddots & & & \vdots \\ \mathbf{R}_{21} & \mathbf{R}_{11} & \mathbf{R}_{12} & \ddots & & \vdots \\ \mathbf{0} & \mathbf{R}_{21} & \mathbf{R}_{11} & \mathbf{R}_{12} & \ddots & \vdots \\ \vdots & \ddots & \mathbf{R}_{21} & \mathbf{R}_{11} & \ddots & \mathbf{0} \\ \vdots & & \ddots & \ddots & \ddots & \mathbf{R}_{12} \\ \mathbf{0} & \cdots & \cdots & \mathbf{0} & \mathbf{R}_{21} & \overline{\mathbf{R}}_{11} \end{bmatrix}, \mathbf{R}_{ij} \in \mathbf{R}^{24n\times 12n}, \mathbf{R}_0 \in \mathbf{R}^{3\times 12n},$$

$$\mathbf{R}_{11} = \begin{bmatrix} \mathbf{E}_3 & \mathbf{E}_4 & \mathbf{0} & \cdots & \cdots & \mathbf{E}_2 \\ \mathbf{E}_2 & \mathbf{E}_3 & \mathbf{E}_4 & \ddots & & \vdots \\ \mathbf{0} & \mathbf{E}_2 & \mathbf{E}_3 & \mathbf{E}_4 & \ddots & \vdots \\ \vdots & \ddots & \mathbf{E}_2 & \mathbf{E}_3 & \mathbf{E}_4 & \mathbf{0} \\ \mathbf{0} & & \ddots & \ddots & \ddots & \mathbf{E}_4 \\ \mathbf{E}_4 & \mathbf{0} & \cdots & \mathbf{0} & \mathbf{E}_2 & \mathbf{E}_3 \end{bmatrix}, \mathbf{R}_{12} = \begin{bmatrix} \mathbf{0} & \mathbf{E}_5 & \mathbf{0} & \cdots & \cdots & \mathbf{0} \\ \mathbf{0} & \mathbf{0} & \mathbf{E}_5 & \ddots & & \vdots \\ \vdots & \ddots & \ddots & \ddots & \ddots & \vdots \\ \vdots & & \ddots & \ddots & \ddots & \mathbf{0} \\ \mathbf{0} & & & \ddots & \ddots & \mathbf{E}_5 \\ \mathbf{E}_5 & \mathbf{0} & \cdots & \cdots & \mathbf{0} & \mathbf{0} \end{bmatrix}$$

$$\mathbf{R}_{i(i+k)} = \mathbf{0} \text{ if } k > 1, \mathbf{R}_{(i+k)i} = \mathbf{0} \text{ if } k > 1$$

$$\mathbf{R}_{21} = BlockDiag\left[\cdots, \mathbf{E}_1\ \mathbf{E}_1, \cdots\right],\ \mathbf{E}_i \in \mathbf{R}^{24\times 12}\ i = 1 \to 5$$

$$\mathbf{R}_0 = \left[\mathbf{E}_6, \mathbf{0}, \cdots, \mathbf{0}, \mathbf{E}_7\right], \mathbf{E}_6 = \frac{1}{2}\left[-\mathbf{I}_3, \mathbf{I}_3, \mathbf{0}, \mathbf{0}\right],$$

$$\mathbf{E}_7 = \frac{1}{2}\left[\mathbf{I}_3,\ \mathbf{I}_3,\ \mathbf{0},\ \mathbf{0}\right].$$

$\hat{\mathbf{R}}_{11}$ and $\overline{\mathbf{R}}_{11}$ have the same structure as $\mathbf{R}_{11}$ except $\mathbf{E}_4$ is replaced by $\hat{\mathbf{E}}_4$, and $\overline{\mathbf{E}}_4$, respectively. Equation (18.37) will be needed to express the tendon forces in terms of $\mathbf{q}$. Equations (18.28) and (18.37) yield the dependent vectors ($\mathbf{t}_{1n1}$, $\mathbf{t}_2$, $\mathbf{t}_3$, $\mathbf{t}_4$, $\mathbf{t}_6$, $\mathbf{t}_7$, $\mathbf{t}_9$, $\mathbf{t}_{10}$) in terms of the independent vectors ($\mathbf{t}_5$, $\mathbf{t}_1$, $\mathbf{r}_1$, $\mathbf{r}_2$). Therefore,

$$\mathbf{l}^d = \mathbf{R}\mathbf{Q}\mathbf{l}. \tag{18.38}$$

18.5 Tendon Forces

Let the tendon forces be described by

$$\mathbf{f}_{\alpha ij} = F_{\alpha ij} \frac{\mathbf{t}_{\alpha ij}}{\left\|\mathbf{t}_{\alpha ij}\right\|} \tag{18.39}$$

© 2002 by CRC Press LLC

For tensegrity structures with some slack strings, the magnitude of the force $F_{\alpha ij}$ can be zero, for taut strings $F_{\alpha ij} > 0$. Because tendons cannnot compress, $F_{\alpha ij}$ cannot be negative. Hence, the magnitude of the force is

$$F_{\alpha ij} = k_{\alpha ij}\left(\left\|\mathbf{t}_{\alpha ij}\right\| - \bar{L}_{\alpha ij}\right) \tag{18.40}$$

where

$$k_{\alpha ij} \triangleq \begin{cases} 0 & , \ if\ \bar{L}_{\alpha ij} > \left\|\mathbf{t}_{\alpha ij}\right\| \\ \bar{k}_{\alpha ij} > 0 & , \ if\ \bar{L}_{\alpha ij} \le \left\|\mathbf{t}_{\alpha ij}\right\| \end{cases}$$

$$\bar{L}_{\alpha ij} - u_{\alpha ij} + L^{o}_{\alpha ij} \ge 0 \tag{18.41}$$

where $L^{o}_{\alpha ij} > 0$ is the rest length of tendon $t_{\alpha ij}$ before any control is applied, and the control is $u_{\alpha ij}$, the change ın the rest length. The control shortens or lengthens the tendon, so $u_{\alpha ij}$ can be positive or negative, but $L^{o}_{\alpha ij} > 0$. So $u_{\alpha ij}$ must obey the constraint (18.41), and

$$u_{\alpha ij} \le L^{o}_{\alpha ij} > 0. \tag{18.42}$$

Note that for t_{1n1} and for $\alpha = 2, 3, 4, 6, 7, 8, 9, 10$ the vectors $\mathbf{t}_{\alpha ij}$ appear in the vector $\mathbf{l}^d$ related to $\mathbf{q}$ from (4.7) by $\mathbf{l}^d = \mathbf{R}\mathbf{q}$, and for $\alpha = 5, 1$ the vectors $\mathbf{t}_{\alpha ij}$ appear in the vector $\mathbf{l}$ related to $\mathbf{q}$ from (18.28), by $\mathbf{l} = \mathbf{Q}^{-1}\mathbf{q}$. Let $P_{\alpha ij}$ denote the selected row of $\mathbf{R}$ associated with $\mathbf{t}_{\alpha ij}$ for $\alpha ij = 1n1$ and for $\alpha = 2, 3, 4, 6, 7, 8, 9, 10$. Let $P_{\alpha ij}$ also denote the selected row of $\mathbf{Q}^{-1}$ when $\alpha = 5, 1$. Then,

$$\mathbf{t}_{\alpha ij} = \mathcal{R}_{\alpha ij}\mathbf{q},\ \mathcal{R}_{\alpha ij} \in^{3\times 12nm} \tag{18.43}$$

$$\left\|\mathbf{t}_{\alpha ij}\right\|^2 = \mathbf{q}^T \mathcal{R}^T_{\alpha ij}\mathcal{R}_{\alpha_{ij}}\mathbf{q} \tag{18.44}$$

From (18.39) and (18.40),

$$\mathbf{f}_{\alpha ij} = -\ \mathbf{K}_{\alpha ij}\ (\mathbf{q})\mathbf{q} + \mathbf{b}_{\alpha ij}\ (\mathbf{q})u_{\alpha ij}$$

where

$$\mathbf{K}_{\alpha ij}(\mathbf{q}) \triangleq k_{\alpha ij}\left(L^{o}_{\alpha ij}\left(\mathbf{q}^T \mathcal{R}^T_{\alpha ij}\mathcal{R}_{\alpha ij}\mathbf{q}\right)^{-\frac{1}{2}} - 1\right)\mathcal{R}_{\alpha ij},\ \mathbf{K}_{\alpha ij} \in \boldsymbol{R}^{3\times 12nm} \tag{18.45}$$

$$\mathbf{b}_{\alpha ij}(\mathbf{q}) \triangleq k_{\alpha ij}(\mathbf{q}^T \mathbf{R}^T_{\alpha ij}\mathbf{R}_{\alpha ij}\mathbf{q})^{-\frac{1}{2}}\mathbf{R}_{\alpha ij}\mathbf{q},\ \mathbf{b}_{\alpha ij} \in \mathbf{R}^{3\times 1} \tag{18.46}$$

Hence,

$$\mathbf{f}^d_{ij} = \begin{bmatrix} \mathbf{f}_{2ij} \\ \mathbf{f}_{3ij} \\ \mathbf{f}_{4ij} \\ \mathbf{f}_{6ij} \\ \mathbf{f}_{7ij} \\ \mathbf{f}_{8ij} \\ \mathbf{f}_{9ij} \\ \mathbf{f}_{10ij} \end{bmatrix} = -\begin{bmatrix} \mathbf{K}_{2ij} \\ \mathbf{K}_{3ij} \\ \mathbf{K}_{4ij} \\ \mathbf{K}_{6ij} \\ \mathbf{K}_{7ij} \\ \mathbf{K}_{8ij} \\ \mathbf{K}_{9ij} \\ \mathbf{K}_{10ij} \end{bmatrix}\mathbf{q}$$

© 2002 by CRC Press LLC

$$
+\begin{bmatrix}
\mathbf{b}_{2ij} & & & & & & & \\
& \mathbf{b}_{3ij} & & & & & & \\
& & \mathbf{b}_{4ij} & & & & & \\
& & & \mathbf{b}_{6ij} & & & & \\
& & & & \mathbf{b}_{7ij} & & & \\
& & & & & \mathbf{b}_{8ij} & & \\
& & & & & & \mathbf{b}_{9ij} & \\
& & & & & & & \mathbf{b}_{10ij}
\end{bmatrix}
\begin{bmatrix} u_{2ij} \\ u_{3ij} \\ u_{4ij} \\ u_{6ij} \\ u_{7ij} \\ u_{8ij} \\ u_{9ij} \\ u_{10ij} \end{bmatrix}
$$

or

$$
\mathbf{f}_{ij}^{d} = -\mathbf{K}_{ij}^{d}\mathbf{q} + \mathbf{P}_{ij}^{d}\mathbf{u}_{ij}^{d}, \tag{18.47}
$$

and

$$
\mathbf{f}_{ij}^{o} = \begin{bmatrix} \mathbf{f}_{5ij} \\ \mathbf{f}_{1ij} \end{bmatrix} = -\begin{bmatrix} \mathbf{K}_{5ij} \\ \mathbf{K}_{1ij} \end{bmatrix}\mathbf{q} + \begin{bmatrix} \mathbf{b}_{5ij} & \mathbf{0} \\ \mathbf{0} & \mathbf{b}_{1ij} \end{bmatrix}\begin{bmatrix} u_{5ij} \\ u_{1ij} \end{bmatrix}
$$

or

$$
\mathbf{f}_{ij}^{o} = -\mathbf{K}_{ij}^{o}\mathbf{q} + \mathbf{P}_{ij}^{o}\mathbf{u}_{ij}^{o}. \tag{18.48}
$$

Now substitute (18.47) and (18.48) into

$$
\bar{\mathbf{f}}_1^{d} = \begin{bmatrix} \mathbf{f}_{1n1} \\ \mathbf{f}_{11}^{d} \\ \mathbf{f}_{21}^{d} \\ \vdots \\ \mathbf{f}_{n1}^{d} \end{bmatrix} = -\begin{bmatrix} \mathbf{K}_{1n1} \\ \mathbf{K}_{11}^{d} \\ \mathbf{K}_{21}^{d} \\ \vdots \\ \mathbf{K}_{n1}^{d} \end{bmatrix}\mathbf{q} + \begin{bmatrix} \mathbf{P}_{1n1} & & & & \\ & \mathbf{P}_{11}^{d} & & & \\ & & \mathbf{P}_{21}^{d} & & \\ & & & \ddots & \\ & & & & \mathbf{P}_{n1}^{d} \end{bmatrix}\begin{bmatrix} u_{1n1} \\ \mathbf{u}_{11}^{d} \\ \mathbf{u}_{21}^{d} \\ \vdots \\ \mathbf{u}_{n1}^{d} \end{bmatrix} = -\bar{\mathbf{K}}_1^{d}\mathbf{q} + \bar{\mathbf{P}}_1^{d}\bar{\mathbf{u}}_1^{d}
$$

$$
\mathbf{f}_2^{d} = \begin{bmatrix} \mathbf{f}_{12}^{d} \\ \mathbf{f}_{22}^{d} \\ \vdots \\ \mathbf{f}_{n2}^{d} \end{bmatrix} = -\begin{bmatrix} \mathbf{K}_{12}^{d} \\ \mathbf{K}_{22}^{d} \\ \vdots \\ \mathbf{K}_{n2}^{d} \end{bmatrix}\mathbf{q} + \begin{bmatrix} \mathbf{P}_{12}^{d} & & & \\ & \mathbf{P}_{22}^{d} & & \\ & & \ddots & \\ & & & \mathbf{P}_{n2}^{d} \end{bmatrix}\begin{bmatrix} \mathbf{u}_{12}^{d} \\ \mathbf{u}_{22}^{d} \\ \vdots \\ \mathbf{u}_{n2}^{d} \end{bmatrix} = -\mathbf{K}_2^{d}\mathbf{q}_2 + \mathbf{P}_2^{d}\mathbf{u}_2^{d}.
$$

Hence, in general,

$$
\mathbf{f}_j^{d} = -\mathbf{K}_j^{d}\mathbf{q} + \mathbf{P}_j^{d}\mathbf{u}_j^{d}
$$

or by defining

$$
\mathbf{K}^{d} = \begin{bmatrix} \bar{\mathbf{K}}_1^{d} \\ \mathbf{K}_2^{d} \\ \vdots \\ \mathbf{K}_m^{d} \end{bmatrix}, \ \mathbf{P}^{d} = \begin{bmatrix} \bar{\mathbf{P}}_1^{d} \\ \mathbf{P}_2^{d} \\ \vdots \\ \mathbf{P}_m^{d} \end{bmatrix} \tag{18.49}
$$

© 2002 by CRC Press LLC

$$\mathbf{f}^d = -\mathbf{K}^d\mathbf{q} + \mathbf{P}^d\mathbf{u}^d.$$

Likewise, for $\mathbf{f}_{11}^o$ forces (18.48),

$$\mathbf{f}_1^o = \begin{bmatrix} \mathbf{f}_{11}^o \\ \mathbf{f}_{21}^o \\ \vdots \\ \mathbf{f}_{n1}^o \end{bmatrix} = -\begin{bmatrix} \mathbf{K}_{11}^o \\ \mathbf{K}_{21}^o \\ \vdots \\ \mathbf{K}_{n1}^o \end{bmatrix}\mathbf{q} + \begin{bmatrix} \mathbf{P}_{11}^o & & & \\ & \mathbf{P}_{21}^o & & \\ & & \ddots & \\ & & & \mathbf{P}_{n1}^o \end{bmatrix}\begin{bmatrix} \mathbf{u}_{11}^o \\ \mathbf{u}_{21}^o \\ \vdots \\ \mathbf{u}_{n1}^o \end{bmatrix}$$

$$\mathbf{f}_j^o = \begin{bmatrix} \mathbf{f}_{1j}^o \\ \mathbf{f}_{2j}^o \\ \vdots \\ \mathbf{f}_{nj}^o \end{bmatrix} = -\begin{bmatrix} \mathbf{K}_{1j}^o \\ \mathbf{K}_{2j}^o \\ \vdots \\ \mathbf{K}_{nj}^o \end{bmatrix}\mathbf{q} + \begin{bmatrix} \mathbf{P}_{1j}^o & & & \\ & \mathbf{P}_{2j}^o & & \\ & & \ddots & \\ & & & \mathbf{P}_{nj}^o \end{bmatrix}\begin{bmatrix} \mathbf{u}_{1j}^o \\ \mathbf{u}_{2j}^o \\ \vdots \\ \mathbf{u}_{nj}^o \end{bmatrix}$$

$$\mathbf{f}_j^o = -\mathbf{K}_j^o\mathbf{q} + \mathbf{P}_j^o\mathbf{u}_j^o \tag{18.50}$$

$$\mathbf{f}^o = -\mathbf{K}^o\mathbf{q} + \mathbf{P}^o\mathbf{u}^o.$$

Substituting (18.49) and (18.50) into (18.E.21) yields

$$\mathbf{f} = -(\mathbf{B}^d\mathbf{K}^d + \mathbf{B}^o\mathbf{K}^o)\mathbf{q} + \mathbf{B}^d\mathbf{P}^d\mathbf{u}^d + \mathbf{B}^o\mathbf{P}^o\mathbf{u}^o + \mathbf{W}^o\mathbf{w}, \tag{18.51}$$

which is written simply as

$$\mathbf{f} = -\tilde{\mathbf{K}}\mathbf{q} + \tilde{\mathbf{B}}\mathbf{u} + \mathbf{W}^o\mathbf{w}, \tag{18.52}$$

by defining,

$$\tilde{\mathbf{K}} \triangleq \mathbf{B}^d\mathbf{K}^d + \mathbf{B}^o\mathbf{K}^o,$$

$$\tilde{\mathbf{B}} \triangleq \left[\mathbf{B}^d\mathbf{P}^d,\ \mathbf{B}^o\mathbf{P}^o\right],$$

$$\mathbf{B}^d\mathbf{P}^d = \begin{bmatrix} \mathbf{B}_3\overline{\mathbf{P}}_1^d & \mathbf{B}_4\mathbf{P}_2^d & \mathbf{0} & \cdots & \cdots & \mathbf{0} \\ \mathbf{B}_5\overline{\mathbf{P}}_1^d & \mathbf{B}_6\mathbf{P}_2^d & \mathbf{B}_4\mathbf{P}_3^d & \ddots & & \vdots \\ \mathbf{0} & \overline{\mathbf{B}}_5\mathbf{P}_2^d & \mathbf{B}_6\mathbf{P}_3^d & \ddots & \ddots & \vdots \\ \vdots & \ddots & \overline{\mathbf{B}}_5\mathbf{P}_3^d & \ddots & \ddots & \mathbf{0} \\ \vdots & & \ddots & \ddots & \ddots & \mathbf{B}_4\mathbf{P}_m^d \\ \mathbf{0} & \cdots & \cdots & \mathbf{0} & \overline{\mathbf{B}}_5\mathbf{P}_{m-1}^d & \mathbf{B}_8\mathbf{P}_m^d \end{bmatrix},$$

© 2002 by CRC Press LLC

$$\mathbf{B}^o\mathbf{P}^o = \begin{bmatrix} \mathbf{B}_1\mathbf{P}_1^o & \mathbf{B}_2\mathbf{P}_2^o & \mathbf{0} & \cdots & \mathbf{0} \\ \mathbf{0} & \mathbf{B}_7\mathbf{P}_2^o & \mathbf{B}_2\mathbf{P}_3^o & \ddots & \vdots \\ \vdots & \ddots & \mathbf{B}_7\mathbf{P}_3^o & \ddots & \mathbf{0} \\ \vdots & & \ddots & \ddots & \mathbf{B}_2\mathbf{P}_m^o \\ \mathbf{0} & \cdots & \cdots & \mathbf{0} & \mathbf{B}_7\mathbf{P}_m^o \end{bmatrix}$$

$$\tilde{\mathbf{K}} = \mathbf{B}^d\mathbf{K}^d + \mathbf{B}^o\mathbf{K}^o = \begin{bmatrix} \mathbf{B}_3\overline{\mathbf{K}}_1^d + \mathbf{B}_1\mathbf{K}_1^o + \mathbf{B}_4\mathbf{K}_2^d + \mathbf{B}_2\mathbf{K}_2^o \\ \mathbf{B}_5\overline{\mathbf{K}}_1^d + \mathbf{B}_6\mathbf{K}_2^d + \mathbf{B}_4\mathbf{K}_3^d + \mathbf{B}_7\mathbf{K}_2^o + \mathbf{B}_2\mathbf{K}_3^o \\ \overline{\mathbf{B}}_5\mathbf{K}_2^d + \mathbf{B}_6\mathbf{K}_3^d + \mathbf{B}_4\mathbf{K}_4^d + \mathbf{B}_7\mathbf{K}_3^o + \mathbf{B}_2\mathbf{K}_4^o \\ \overline{\mathbf{B}}_5\mathbf{K}_3^d + \mathbf{B}_5\mathbf{K}_4^d + \mathbf{B}_4\mathbf{K}_5^d + \mathbf{B}_7\mathbf{K}_4^o + \mathbf{B}_2\mathbf{K}_5^o \\ \vdots \\ \overline{\mathbf{B}}_5\mathbf{K}_{m-2}^d + \mathbf{B}_6\mathbf{K}_{m-1}^d + \mathbf{B}_4\mathbf{K}_m^d + \mathbf{B}_7\mathbf{K}_{m-1}^o + \mathbf{B}_2\mathbf{K}_m^o \\ \overline{\mathbf{B}}_5\mathbf{K}_{m-1}^d + \mathbf{B}_6\mathbf{K}_m^d + \mathbf{B}_7\mathbf{K}_m^o \end{bmatrix} \tag{18.53}$$

$$\tilde{\mathbf{u}} = \begin{bmatrix} \overline{\mathbf{u}}_1^d \\ \mathbf{u}_2^d \\ \mathbf{u}_3^d \\ \mathbf{u}_4^d \\ \vdots \\ \mathbf{u}_m^d \\ \mathbf{u}_1^o \\ \mathbf{u}_2^o \\ \mathbf{u}_3^o \\ \mathbf{u}_4^o \\ \vdots \\ \mathbf{u}_m^o \end{bmatrix}, \quad \mathbf{u} = \begin{bmatrix} \hat{\mathbf{u}}_1^d \\ \mathbf{u}_2^d \\ \mathbf{u}_3^d \\ \mathbf{u}_4^d \\ \vdots \\ \hat{\mathbf{u}}_m^d \\ \mathbf{u}_1^o \\ \mathbf{u}_2^o \\ \mathbf{u}_3^o \\ \mathbf{u}_4^o \\ \vdots \\ \mathbf{u}_m^o \end{bmatrix} \tag{18.54}$$

In vector $\tilde{\mathbf{u}}$ in (18.54), u_{1n1} appears twice (for notational convenience u_{1n1} appears in $\overline{\mathbf{u}}_1^d$ and in $\mathbf{u}_1^o$). From the rules of closure, $\mathbf{t}_{9i1} = -\mathbf{t}_{1i1}$ and $\mathbf{t}_{7im} = -\mathbf{t}_{10im}$, $i = 1, 2, \ldots, n$, but $\mathbf{t}_{1i1}$, $\mathbf{t}_{7im}$, $\mathbf{t}_{9i1}$, $\mathbf{t}_{10im}$ all appear in (18.54). Hence, the rules of closure leave only $n(10m - 2)$ tendons in the structure, but (18.54) contains $10nm + 1$ tendons. To eliminate the redundant variables in (18.54) define $\tilde{\mathbf{u}} = \mathbf{Tu}$, where $\mathbf{u}$ is the independent set $\mathbf{u} \in^{n(10m-2)}$, and $\tilde{\mathbf{u}} \in \boldsymbol{R}^{10nm+1}$ is given by (18.54). We choose to keep $\mathbf{t}_{7im}$ in u and delete $\mathbf{t}_{10im}$ by setting $\mathbf{t}_{10im} = -\mathbf{t}_{7im}$. We choose to keep $\mathbf{t}_{1i1}$ and delete $\mathbf{t}_{9i1}$ by setting $\mathbf{t}_{9i1} = -\mathbf{t}_{1i1}$, $i = 1, 2, \ldots$, n. This requires new definitions of certain subvectors as follows in (18.57) and (18.58). The vector $\tilde{\mathbf{u}}$ is now defined in (18.54). We have reduced the $\tilde{\mathbf{u}}$ vector by $2n + 1$ scalars to $\mathbf{u}$. The $\mathbf{T}$ matrix is formed by the following blocks,

© 2002 by CRC Press LLC

$$
\mathbf{T} = \left(\begin{array}{c|c|c|c|c}
\mathbf{0} & \mathbf{0} & \mathbf{0} & \cdots\ \mathbf{0}1 & \mathbf{0} \\ \hline
\begin{matrix}\mathbf{T}_1 & & \\ & \ddots & \\ & & \mathbf{T}_1\end{matrix} & & & \begin{matrix}\mathbf{S} & & \\ & \ddots & \\ & & \mathbf{S}\end{matrix} & \\ \hline
 & \begin{matrix}\mathbf{I}_8 & & \\ & \ddots & \\ & & \mathbf{I}_8\end{matrix} & & & \\ \hline
 & & \begin{matrix}\mathbf{T}_2 & & \\ & \ddots & \\ & & \mathbf{T}_2\end{matrix} & & \\ \hline
 & & & \begin{matrix}\mathbf{I}_2 & & \\ & \ddots & \\ & & \mathbf{I}_2\end{matrix} & \\ \hline
 & & & & \begin{matrix}\mathbf{I}_2 & & \\ & \ddots & \\ & & \mathbf{I}_2\end{matrix}
\end{array}\right) \tag{18.55}
$$

$$\in \boldsymbol{R}^{(10nm+1)\times(n(10m-2))}$$

where

$$
\mathbf{T}_1 = \left(\begin{array}{c|c}
\mathbf{I}_6 & \mathbf{0}_{6\times1} \\ \hline
\mathbf{0}_{1\times6} & 0 \\
\mathbf{0}_{1\times6} & 1
\end{array}\right) \in \boldsymbol{R}^{8\times7}
$$

$$
\mathbf{T}_2 = \left(\begin{array}{c}
\mathbf{I}_7 \\ \hline
0\ \ 0\ \ 0\ \ 0\ \ -1\ \ 0\ \ 0
\end{array}\right) \in \boldsymbol{R}^{8\times7}
$$

$$
\mathbf{S} = \left(\begin{array}{cc}
\multicolumn{2}{c}{\mathbf{0}_{6\times2}} \\ \hline
0 & -1 \\
0 & \mathbf{0}
\end{array}\right) \in \boldsymbol{R}^{8\times2}. \tag{18.56}
$$

There are n blocks labeled $\mathbf{T}_1$, $n(m-2)$ blocks labeled $\mathbf{I}_8$ (for $m \le 2$ no $\mathbf{I}_8$ blocks needed, see appendix 18.D), n blocks labeled $\mathbf{T}_2$, nm blocks labeled $\mathbf{I}_2$ blocks, and n blocks labeled $\mathbf{S}$.

The $\mathbf{u}_1^d$ block becomes

$$
\hat{\mathbf{u}}_1^d \triangleq \begin{bmatrix} \hat{\mathbf{u}}_{11}^d \\ \hat{\mathbf{u}}_{21}^d \\ \hat{\mathbf{u}}_{31}^d \\ \vdots \\ \hat{\mathbf{u}}_{n1}^d \end{bmatrix}, \quad \hat{\mathbf{u}}_{i1}^d = \begin{bmatrix} u_{2n1} \\ u_{3n1} \\ u_{4n1} \\ u_{6n1} \\ u_{7n1} \\ u_{8n1} \\ u_{10n1} \end{bmatrix} \in \boldsymbol{R}^{7\times1}, \quad i = 1,\ 2,\ 3,\ \ldots n,\ \ j = 1 \tag{18.57}
$$

© 2002 by CRC Press LLC

The $\mathbf{u}_m^d$ block becomes

$$\hat{\mathbf{u}}_m^d \triangleq \begin{bmatrix} \hat{\mathbf{u}}_{1m}^d \\ \hat{\mathbf{u}}_{2m}^d \\ \hat{\mathbf{u}}_{3m}^d \\ \vdots \\ \hat{\mathbf{u}}_{nm}^d \end{bmatrix}, \ \hat{\mathbf{u}}_{im}^d = \begin{bmatrix} u_{2nm} \\ u_{3nm} \\ u_{4nm} \\ u_{6nm} \\ u_{7nm} \\ u_{8nm} \\ u_{9nm} \end{bmatrix} \in \boldsymbol{R}^{7\times 1}, \quad i = 1,\ 2,\ 3,\ \ldots n, \quad j = m. \tag{18.58}$$

The $\mathbf{u}_1^d$ block is the $\overline{\mathbf{u}}_1^d$ block with the first element u_{1n1} removed, because it is included in $\mathbf{u}_{n1}^o$.

From (18.17) and (18.52),

$$\ddot{\mathbf{q}} + (\mathbf{K}_r(\dot{\mathbf{q}}) + \mathbf{K}_p(\mathbf{q}))\mathbf{q} = \mathbf{B}(\mathbf{q})\mathbf{u} + \mathbf{D}(\mathbf{q})\mathbf{w}, \tag{18.59}$$

where,

$$\mathbf{K}p = \mathbf{H}(\mathbf{q})\ \tilde{\mathbf{K}}(\mathbf{q}),$$

$$\mathbf{B} = \mathbf{H}(\mathbf{q})\ \tilde{\mathbf{B}}(\mathbf{q})\mathbf{T},$$

$$\mathbf{D} = \mathbf{H}(\mathbf{q})\mathbf{W}^o.$$

The nodal points of the structure are located by the vector $\mathbf{p}$. Suppose that a selected set of nodal points are chosen as outputs of interest. Then

$$\mathbf{y}p = \mathbf{Cp} = \mathbf{CPq} \tag{18.60}$$

where $\mathbf{P}$ is defined by (18.26). The length of tendon vector $\mathbf{t}_{\alpha ij} = \mathcal{R}_{\alpha ij}\mathbf{q}$ is given from (18.44). Therefore, the output vector $\mathbf{y}_l$ describing all tendon lengths, is

$$\mathbf{y}_l = \begin{bmatrix} \vdots \\ \mathbf{y}_{\alpha ij} \\ \vdots \end{bmatrix}, \ \mathbf{y}_{\alpha ij} = \left(\mathbf{q}^T \mathcal{R}_{\alpha ij}^T \mathcal{R}_{\alpha ij}\mathbf{q}\right)^{\frac{1}{2}}.$$

Another ouput of interest might be tension, so from (18.40) and (18.44)

$$\mathbf{y}_f = \begin{bmatrix} \vdots \\ F_{\alpha ij} \\ \vdots \end{bmatrix}, \ F_{\alpha ij} = k_{\alpha ij}(\mathbf{y}_{\alpha ij} - \overline{L}_{\alpha ij}).$$

The static equilibria can be studied from the equations

$$\mathbf{K}_p(\mathbf{q})\mathbf{q} = \mathbf{B}(\mathbf{q})\mathbf{u} + \mathbf{D}(\mathbf{q})\mathbf{w},\ \mathbf{y}_p = \mathbf{CPq}. \tag{18.61}$$

© 2002 by CRC Press LLC

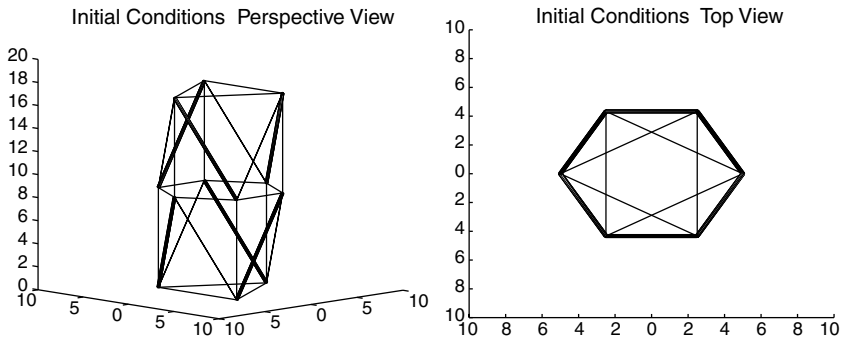

FIGURE 18.10 Initial conditions with nodal points on cylinder surface.

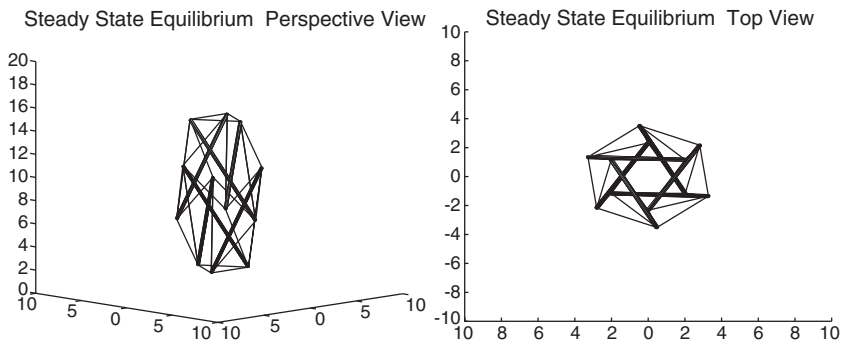

FIGURE 18.11 Steady-state equilibrium.

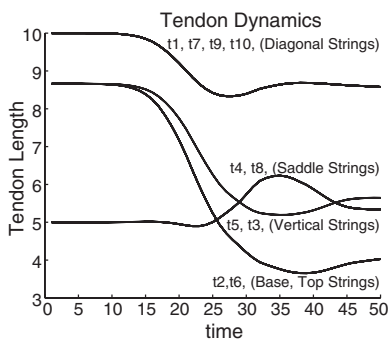

FIGURE 18.12 Tendon dynamics.

Of course, one way to generate equilibria is by simulation from arbitrary initial conditions and record the steady-state value of **q**. The exhaustive definitive study of the stable equilibria is in a separate paper.[27]

Damping strategies for controlled tensegrity structures are a subject of further research. The example case given in Appendix 18.D was coded in Matlab and simulated. Artificial critical damping was included in the simulation below. The simulation does not include external disturbances or control inputs. All nodes of the structure were placed symmetrically around the surface of a cylinder, as seen in Figure 18.10. Spring constants and natural rest lengths were specified equally for all tendons in the structure. One would expect the structure to collapse in on itself with this given initial condition. A plot of steady-state equilibrium is given in Figure 18.11 and string lengths in Figure 18.12.

© 2002 by CRC Press LLC

18.6 Conclusion

This chapter developed the exact nonlinear equations for a Class 1 tensegrity shell, having nm rigid rods and $n(10m - 2)$ tendons, subject to the assumption that the tendons are linear-elastic, and the rods are rigid rods of constant length. The equations are described in terms of $6nm$ degrees of freedom, and the accelerations are given explicitly. Hence, no inversion of the mass matrix is required. For large systems this greatly improves the accuracy of simulations.

Tensegrity systems of four classes are characterized by these models. Class 2 includes rods that are in contact at nodal points, with a ball joint, transmitting no torques. In Class 1 the rods do not touch and a stable equilibrium must be achieved by pretension in the tendons. The primal shell class contains the minimum number of tendons ($8nm$) for which stability is possible.

Tensegrity structures offer some potential advantages over classical structural systems composed of continua (such as columns, beams, plates, and shells). The overall structure can bend but all elements of the structure experience only axial loads, so no member bending. The absence of bending in the members promises more precise models (and hopefully more precise control). Prestress allows members to be uni-directionally loaded, meaning that no member experiences reversal in the direction of the load carried by the member. This eliminates a host of nonlinear problems known to create difficulties in control (hysteresis, dead zones, and friction).

Acknowledgment

The authors recognize the valuable efforts of T. Yamashita in the first draft of this chapter.

© 2002 by CRC Press LLC

Appendix 18.A Proof of Theorem 18.1

Refer to Figure 18.8 and define

$$\underline{\mathbf{q}}_1 = \underline{\mathbf{p}}_2 + \underline{\mathbf{p}}_1,\ \underline{\mathbf{q}}_2 = \underline{\mathbf{p}}_2 - \underline{\mathbf{p}}_1,$$

using the vectors $\underline{\mathbf{p}}_1$ and $\underline{\mathbf{p}}_2$ which locate the end points of the rod. The rod mass center is located by the vector,

$$\underline{\mathbf{p}}_c = \frac{1}{2}\underline{\mathbf{q}}_1. \tag{18.A.1}$$

Hence, the translation equation of motion for the mass center of the rod is

$$m\ddot{\underline{\mathbf{p}}}_c = \frac{m}{2}\ddot{\underline{\mathbf{q}}}_1 = (\hat{\underline{\mathbf{f}}}_1 + \hat{\underline{\mathbf{f}}}_2), \tag{18.A.2}$$

where a dot over a vector is a time derivative with respect to the inertial reference frame. A vector $\underline{\mathbf{p}}$ locating a mass element, dm, along the centerline of the rod is

$$\underline{\mathbf{p}} = \underline{\mathbf{p}}_1 + \rho(\underline{\mathbf{p}}_2 - \underline{\mathbf{p}}_1) = \frac{1}{2}\underline{\mathbf{q}}_1 + (\rho - \frac{1}{2})\underline{\mathbf{q}}_2,\ 0 \le \rho \le 1,\ \rho = \frac{x}{L}, \tag{18.A.3}$$

and the velocity of the mass dm, $\underline{\mathbf{v}}$, is

$$\underline{\mathbf{v}} = \dot{\underline{\mathbf{p}}} = \frac{1}{2}\dot{\underline{\mathbf{q}}}_1 + (\rho - \frac{1}{2})\dot{\underline{\mathbf{q}}}_2. \tag{18.A.4}$$

The angular momentum for the rod about the mass center, $\underline{\mathbf{h}}_c$, is

$$\underline{\mathbf{h}}_c = \int_m (-\underline{\mathbf{p}} - \underline{\mathbf{p}}_c) \times \dot{\underline{\mathbf{p}}}\, dm \tag{18.A.5}$$

where the mass dm can be described using $dx = L\, d\rho$ as

$$dm = \left(\frac{m}{L}\right)(L\, d\rho) = m\, d\rho. \tag{18.A.6}$$

Hence, (18.A.2) can be rewritten as follows:

$$\underline{\mathbf{h}}_c = \int_0^1 (\underline{\mathbf{p}} - \underline{\mathbf{p}}_c) \times \dot{\underline{\mathbf{p}}}(m\, d\rho) \tag{18.A.7}$$

where (18.A.1) and (18.A.3) yield

$$\underline{\mathbf{p}} - \underline{\mathbf{p}}_c = (\rho - \frac{1}{2})\underline{\mathbf{q}}_2. \tag{18.A.8}$$

(18.A.4)–(18.A.8) yield

© 2002 by CRC Press LLC

$$
\begin{aligned}
\underline{\mathbf{h}}_c &= m\int_0^1 (\rho-\frac{1}{2})\underline{\mathbf{q}}_2 \times \left\{\frac{1}{2}\dot{\underline{\mathbf{q}}}_1 + (\rho-\frac{1}{2})\dot{\underline{\mathbf{q}}}_2\right\} d\rho \\
&= m\underline{\mathbf{q}}_2 \times \left\{\dot{\underline{\mathbf{q}}}_1 \int_0^1 \frac{1}{2}(\rho-\frac{1}{2})\, d\rho + \dot{\underline{\mathbf{q}}}_2 \int_0^1 (\rho-\frac{1}{2})^2 d\rho\right\} \\
&= m\underline{\mathbf{q}}_2 \times \left(\frac{1}{2}\left[\frac{1}{2}\rho^2 - \frac{1}{2}\rho\right]_0^1 \dot{\underline{\mathbf{q}}}_1 + \left[\frac{1}{3}(\rho-\frac{1}{2})^3\right]_0^1 \dot{\underline{\mathbf{q}}}_2\right) \\
&= \frac{m}{12}\underline{\mathbf{q}}_2 \times \dot{\underline{\mathbf{q}}}_2
\end{aligned}
\tag{18.A.9}
$$

The applied torque about the mass center, $\underline{\boldsymbol{\tau}}_c$, is

$$
\bar{\boldsymbol{\tau}}_c = \frac{1}{2}\underline{\mathbf{q}}_2 \times (\hat{\underline{\mathbf{f}}}_2 - \hat{\underline{\mathbf{f}}}_1)
$$

Then, substituting $\underline{\mathbf{h}}_c$ and $\underline{\boldsymbol{\tau}}_c$ from (18.A.9) into Euler's equations, we obtain

$$
\dot{\underline{\mathbf{h}}}_c = \underline{\boldsymbol{\tau}}_c
$$

or

$$
\begin{aligned}
\dot{\underline{\mathbf{h}}}_c &= \frac{m}{12}(\dot{\underline{\mathbf{q}}}_2 \times \dot{\underline{\mathbf{q}}}_2 + \underline{\mathbf{q}}_2 \times \ddot{\underline{\mathbf{q}}}_2) \\
&= \frac{m}{12}\underline{\mathbf{q}}_2 \times \ddot{\underline{\mathbf{q}}}_2 = \frac{1}{2}\underline{\mathbf{q}}_2 \times (\hat{\underline{\mathbf{f}}}_2 - \hat{\underline{\mathbf{f}}}_1)
\end{aligned}
\tag{18.A.10}
$$

Hence, (18.A.2) and (18.A.10) yield the motion equations for the rod:

$$
\begin{cases}
\frac{m}{2}\ddot{\underline{\mathbf{q}}}_1 = \hat{\underline{\mathbf{f}}}_1 + \hat{\underline{\mathbf{f}}}_2 \\
\frac{m}{6}(\underline{\mathbf{q}}_2 \times \ddot{\underline{\mathbf{q}}}_2) = \underline{\mathbf{q}}_2 \times (\hat{\underline{\mathbf{f}}}_2 - \hat{\underline{\mathbf{f}}}_1)
\end{cases}
\tag{18.A.11}
$$

We have assumed that the rod length L is constant. Hence, the following constraints for $\underline{\mathbf{q}}_2$ hold:

$$
\underline{\mathbf{q}}_2 \cdot \underline{\mathbf{q}}_2 = L^2
$$

$$
\frac{d}{dt}(\underline{\mathbf{q}}_2 \cdot \underline{\mathbf{q}}_2) = \dot{\underline{\mathbf{q}}}_2 \cdot \underline{\mathbf{q}}_2 + \underline{\mathbf{q}}_2 \cdot \dot{\underline{\mathbf{q}}}_2 = 2\underline{\mathbf{q}}_2 \cdot \dot{\underline{\mathbf{q}}}_2 = 0
$$

$$
\frac{d}{dt}(\underline{\mathbf{q}}_2 \cdot \dot{\underline{\mathbf{q}}}_2) = \dot{\underline{\mathbf{q}}}_2 \cdot \dot{\underline{\mathbf{q}}}_2 + \underline{\mathbf{q}}_2 \cdot \ddot{\underline{\mathbf{q}}}_2 = 0
$$

Collecting (18.A.11) and the constraint equations we have

$$
\begin{cases}
\frac{m}{2}\ddot{\underline{\mathbf{q}}}_1 = \hat{\underline{\mathbf{f}}}_1 + \hat{\underline{\mathbf{f}}}_2 \\
\frac{m}{6}(\underline{\mathbf{q}}_2 \times \ddot{\underline{\mathbf{q}}}_2) = \underline{\mathbf{q}}_2 \times (\hat{\underline{\mathbf{f}}}_2 - \hat{\underline{\mathbf{f}}}_1) \\
\dot{\underline{\mathbf{q}}}_2 \cdot \dot{\underline{\mathbf{q}}}_2 + \underline{\mathbf{q}}_2 \cdot \ddot{\underline{\mathbf{q}}}_2 = 0 \\
\underline{\mathbf{q}}_2 \cdot \underline{\mathbf{q}}_2 = L^2
\end{cases}
\tag{18.A.12}
$$

© 2002 by CRC Press LLC

We now develop the matrix version of (18.A.12). Recall that

$$\underline{\mathbf{q}}_i = \underline{\mathbf{E}}_{\mathbf{q}i} \quad ; \quad \underline{\hat{\mathbf{f}}}_i = \underline{\mathbf{E}}\hat{\mathbf{f}}_i$$

Also note that $\underline{\mathbf{E}}^T \cdot \underline{\mathbf{E}} = 3 \times 3$ identity. After some manipulation, (18.A.12) can be written as:

$$\begin{aligned} \tfrac{m}{2}\ddot{\mathbf{q}}_1 &= \hat{\mathbf{f}}_1 + \hat{\mathbf{f}}_2 \\ \tfrac{m}{6}\tilde{\mathbf{q}}_2\ddot{\mathbf{q}}_2 &= \tilde{\mathbf{q}}_2(\hat{\mathbf{f}}_2 - \hat{\mathbf{f}}_1) \\ \mathbf{q}_2^T\ddot{\mathbf{q}}_2 &= -\dot{\mathbf{q}}_2^T\dot{\mathbf{q}}_2 \\ \mathbf{q}_2^T\mathbf{q}_2 &= L^2. \end{aligned} \tag{18.A.13}$$

Introduce scaled force vectors by dividing the applied forces by m and mL

$$\mathbf{g}_1 \triangleq (\hat{\mathbf{f}}_1 + \hat{\mathbf{f}}_2)\frac{2}{m}, \ \mathbf{g}_2 \triangleq (\hat{\mathbf{f}}_1 - \hat{\mathbf{f}}_2)\frac{6}{mL^2}.$$

Then, (18.A.13) can be rewritten as

$$\begin{aligned} \ddot{\mathbf{q}}_1 &= \mathbf{g}_1 \\ \tilde{\mathbf{q}}_2\ddot{\mathbf{q}}_2 &= \tilde{\mathbf{q}}_2(-\mathbf{g}_2 L^2) \\ \mathbf{q}_2^T\ddot{\mathbf{q}}_2 &= -\dot{\mathbf{q}}_2^T\dot{\mathbf{q}}_2 \\ \mathbf{q}_2^T\mathbf{q}_2 &= L^2. \end{aligned} \tag{18.A.14}$$

Solving for $\ddot{\mathbf{q}}_2$ requires,

$$\begin{bmatrix} \tilde{\mathbf{q}}_2 \\ \mathbf{q}_2^T \end{bmatrix} \ddot{\mathbf{q}}_2 = \begin{bmatrix} \mathbf{0} \\ -\dot{\mathbf{q}}_2^T\dot{\mathbf{q}}_2 \end{bmatrix} - \begin{bmatrix} \tilde{\mathbf{q}}_2 \\ \mathbf{0} \end{bmatrix} \mathbf{g}_2 L^2 \tag{18.A.15}$$

Lemma *For any vector* $\mathbf{q}$, *such that* $\mathbf{q}^T\mathbf{q} = L^2$,

$$\begin{bmatrix} \tilde{\mathbf{q}} \\ \mathbf{q}^T \end{bmatrix}^T \begin{bmatrix} \tilde{\mathbf{q}} \\ \mathbf{q}^T \end{bmatrix} = L_2 \mathbf{I}_3$$

Proof:

$$\begin{bmatrix} 0 & q_3 & -q_2 & q_1 \\ -q_3 & 0 & q_1 & q_2 \\ q_2 & -q_1 & 0 & q_3 \end{bmatrix} \begin{bmatrix} 0 & -q_3 & q_2 \\ q_3 & 0 & -q_1 \\ -q_2 & q_1 & 0 \\ q_1 & q_2 & q_3 \end{bmatrix} = L^2 \mathbf{I}_3 \qquad \Delta.$$

Since the coefficient of $\ddot{\mathbf{q}}_2$ in (18.A.15) has linearly independent columns by virtue of the Lemma, the unique solution for $\ddot{\mathbf{q}}_2$ is

© 2002 by CRC Press LLC

$$\ddot{\mathbf{q}}_2 = \begin{bmatrix} \tilde{\mathbf{q}}_2 \\ \mathbf{q}_2^T \end{bmatrix}^+ \left(\begin{bmatrix} \mathbf{0} \\ -\dot{\mathbf{q}}_2^T \dot{\mathbf{q}}_2 \end{bmatrix} - \begin{bmatrix} \tilde{\mathbf{q}}_2 \\ \mathbf{0} \end{bmatrix} \mathbf{g}_2 L^2 \right), \tag{18.A.16}$$

where the pseudo inverse is uniquely given by

$$\begin{bmatrix} \tilde{\mathbf{q}}_2 \\ \mathbf{q}_2^T \end{bmatrix}^+ = \left(\begin{bmatrix} \tilde{\mathbf{q}}_2 \\ \mathbf{q}_2^T \end{bmatrix}^T \begin{bmatrix} \tilde{\mathbf{q}}_2 \\ \mathbf{q}_2^T \end{bmatrix} \right)^{-1} \begin{bmatrix} \tilde{\mathbf{q}}_2 \\ \mathbf{q}_2^T \end{bmatrix}^T = L^{-2} \begin{bmatrix} \tilde{\mathbf{q}}_2 \\ \mathbf{q}_2^T \end{bmatrix}^T$$

It is easily verified that the existence condition for $\ddot{\mathbf{q}}_2$ in (18.A.15) is satisfied since

$$\left(\mathbf{I} - \begin{bmatrix} \tilde{\mathbf{q}}_2 \\ \mathbf{q}_2^T \end{bmatrix} \begin{bmatrix} \tilde{\mathbf{q}}_2 \\ \mathbf{q}_2^T \end{bmatrix}^+ \right) \left(\begin{bmatrix} \mathbf{0} \\ -\dot{\mathbf{q}}_2^T \dot{\mathbf{q}}_2 \end{bmatrix} - \begin{bmatrix} \tilde{\mathbf{q}}_2 \\ \mathbf{0} \end{bmatrix} \mathbf{g}_2 L^2 \right) = 0,$$

Hence, (18.A.16) yields

$$\ddot{\mathbf{q}}_2 = -\frac{\dot{\mathbf{q}}_2^T \dot{\mathbf{q}}_2}{L^2} \mathbf{q}_2 + \tilde{\mathbf{q}}_2^2 \mathbf{g}_2 \tag{18.A.17}$$

Bringing the first equation of (18.A.14) together with (18.A.17) leads to

$$\begin{bmatrix} \ddot{\mathbf{q}}_1 \\ \ddot{\mathbf{q}}_2 \end{bmatrix} + \begin{bmatrix} \mathbf{0} & \mathbf{0} \\ \mathbf{0} & \frac{\dot{\mathbf{q}}_2^T \dot{\mathbf{q}}_2}{L^2} \mathbf{I}_3 \end{bmatrix} \begin{bmatrix} \mathbf{q}_1 \\ \mathbf{q}_2 \end{bmatrix} = \begin{bmatrix} \mathbf{I}_3 & \mathbf{0} \\ \mathbf{0} & \tilde{\mathbf{q}}_2^2 \end{bmatrix} \begin{bmatrix} \mathbf{g}_1 \\ \mathbf{g}_2 \end{bmatrix} \tag{18.A.18}$$

Recalling the definition of $\mathbf{g}_1$ and $\mathbf{g}_2$ we obtain

$$\begin{bmatrix} \ddot{\mathbf{q}}_1 \\ \ddot{\mathbf{q}}_2 \end{bmatrix} + \begin{bmatrix} \mathbf{0} & \mathbf{0} \\ \mathbf{0} & \frac{\dot{\mathbf{q}}_2^T \dot{\mathbf{q}}_2}{L^2} \mathbf{I}_3 \end{bmatrix} \begin{bmatrix} \mathbf{q}_1 \\ \mathbf{q}_2 \end{bmatrix} = \frac{2}{m} \begin{bmatrix} \mathbf{I}_3 & \mathbf{0} \\ \mathbf{0} & \frac{3}{L^2} \tilde{\mathbf{q}}_2^2 \end{bmatrix} \begin{bmatrix} \mathbf{f}_1 \\ \mathbf{f}_2 \end{bmatrix} \tag{18.A.19}$$

where we clarify

$$\begin{bmatrix} \mathbf{f}_1 \\ \mathbf{f}_2 \end{bmatrix} = \begin{bmatrix} \hat{\mathbf{f}}_1 + \hat{\mathbf{f}}_2 \\ \hat{\mathbf{f}}_1 - \hat{\mathbf{f}}_2 \end{bmatrix}.$$

Equation (18.A.19) is identical to (18.17), so this completes the proof of Theorem 18.1.

Example 1

$$\mathbf{q}_1 = \mathbf{p}_1 + \mathbf{p}_2 = \begin{bmatrix} p_{11} + p_{21} \\ p_{12} + p_{22} \end{bmatrix} = \begin{bmatrix} q_{11} \\ q_{12} \end{bmatrix},$$

$$\mathbf{q}_2 = \mathbf{p}_2 - \mathbf{p}_1 = \begin{bmatrix} p_{21} - p_{11} \\ p_{22} - p_{12} \end{bmatrix} = \begin{bmatrix} q_{21} \\ q_{22} \end{bmatrix},$$

The generalized forces are now defined as

© 2002 by CRC Press LLC

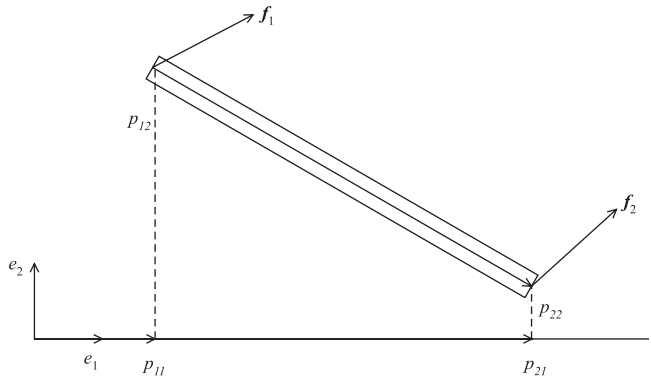

FIGURE 18.A.1 A rigid bar of the length L and mass m.

$$\mathbf{g}_1 = \frac{2}{m}(\hat{\mathbf{f}}_1 + \hat{\mathbf{f}}_2) = \frac{2}{m}\begin{bmatrix} f_{11} + f_{21} \\ f_{12} + f_{22} \end{bmatrix}, \ \mathbf{g}_2 = \frac{6}{mL^2}(\hat{\mathbf{f}}_2 - \hat{\mathbf{f}}_1) = \frac{6}{mL^2}\begin{bmatrix} f_{21} - f_{11} \\ f_{22} - f_{12} \end{bmatrix}$$

From (18.A.16),

$$\begin{bmatrix} \ddot{q}_{11} \\ \ddot{q}_{12} \\ \ddot{q}_{21} \\ \ddot{q}_{22} \end{bmatrix} = \left[\begin{array}{cc|cc} 0 & 0 & 0 & 0 \\ 0 & 0 & 0 & 0 \\ \hline 0 & 0 & -\frac{\dot{q}_{21}^2 + \dot{q}_{22}^2}{L^2} & 0 \\ 0 & 0 & 0 & -\frac{\dot{q}_{21}^2 + \dot{q}_{22}^2}{L^2} \end{array}\right] \begin{bmatrix} q_{11} \\ q_{12} \\ q_{21} \\ q_{22} \end{bmatrix} + \left[\begin{array}{cc|cc} 1 & 0 & 0 & 0 \\ 0 & 1 & 0 & 0 \\ \hline 0 & 0 & q_{22}^2 & -q_{21}q_{22} \\ 0 & 0 & -q_{21}q_{22} & q_{21}^2 \end{array}\right] \begin{bmatrix} \mathbf{g}_1 \\ \mathbf{g}_2 \end{bmatrix}$$

Example 2

Using the formulation developed in 18.A.3, 18.A.4, and 18.A.5 we derive the dynamics of a planar tensegrity. The rules of closure become:

$$\mathbf{t}_5 = -\mathbf{t}_4$$

$$\mathbf{t}_8 = \mathbf{t}_1$$

$$\mathbf{t}_7 = -\mathbf{t}_2$$

$$\mathbf{t}_6 = -\mathbf{t}_3$$

We define the independent vectors $\mathbf{l}^o$ and $\mathbf{l}^d$:

$$\mathbf{l}^o = \begin{bmatrix} \rho \\ \mathbf{r}_1 \\ \mathbf{r}_2 \\ \mathbf{t}_5 \end{bmatrix}, \ \mathbf{l}^d = \begin{bmatrix} \mathbf{t}_1 \\ \mathbf{t}_2 \\ \mathbf{t}_3 \end{bmatrix}$$

The nodal forces are

$$\bar{\mathbf{f}} = \begin{bmatrix} \hat{\mathbf{f}}_1 + \hat{\mathbf{f}}_2 \\ \hat{\mathbf{f}}_1 - \hat{\mathbf{f}}_2 \\ \hat{\mathbf{f}}_3 + \hat{\mathbf{f}}_4 \\ \hat{\mathbf{f}}_3 - \hat{\mathbf{f}}_4 \end{bmatrix} = \begin{bmatrix} (\mathbf{f}_3 - \mathbf{f}_2 + \mathbf{w}_1) + (\mathbf{f}_5 - \mathbf{f}_1 + \mathbf{w}_2) \\ (\mathbf{f}_3 - \mathbf{f}_2 + \mathbf{w}_1) - (\mathbf{f}_5 - \mathbf{f}_1 + \mathbf{w}_2) \\ (\mathbf{f}_1 + \mathbf{f}_2 + \mathbf{w}_3) + (-\mathbf{f}_3 - \mathbf{f}_5 + \mathbf{w}_4) \\ (\mathbf{f}_1 + \mathbf{f}_2 + \mathbf{w}_3) - (-\mathbf{f}_3 - \mathbf{f}_5 + \mathbf{w}_4) \end{bmatrix}$$

© 2002 by CRC Press LLC

We can write

$$\bar{\mathbf{f}} = \begin{bmatrix} \mathbf{I}_2 \\ -\mathbf{I}_2 \\ -\mathbf{I}_2 \\ \mathbf{I}_2 \end{bmatrix} \mathbf{f}^o + \begin{bmatrix} -\mathbf{I}_2 & -\mathbf{I}_2 & \mathbf{I}_2 \\ \mathbf{I}_2 & -\mathbf{I}_2 & \mathbf{I}_2 \\ \mathbf{I}_2 & \mathbf{I}_2 & -\mathbf{I}_2 \\ \mathbf{I}_2 & \mathbf{I}_2 & \mathbf{I}_2 \end{bmatrix} \mathbf{f}^d + \begin{bmatrix} \mathbf{I}_2 & \mathbf{I}_2 & \mathbf{0} & \mathbf{0} \\ \mathbf{I}_2 & -\mathbf{I}_2 & \mathbf{0} & \mathbf{0} \\ \mathbf{0} & \mathbf{0} & \mathbf{I}_2 & \mathbf{I}_2 \\ \mathbf{0} & \mathbf{0} & \mathbf{I}_2 & -\mathbf{I}_2 \end{bmatrix} \mathbf{w}$$

where

$$\mathbf{f}^o = \left[\mathbf{f}_5\right],\ \mathbf{f}^d = \begin{bmatrix} \mathbf{f}_1 \\ \mathbf{f}_2 \\ \mathbf{f}_3 \end{bmatrix},\ \mathbf{w} = \begin{bmatrix} \mathbf{w}_1 \\ \mathbf{w}_2 \\ \mathbf{w}_3 \\ \mathbf{w}_4 \end{bmatrix}.$$

Or, with the obvious definitions for $\mathbf{B}^o$, $\mathbf{B}^d$, and $\mathbf{W}_1$, in matrix notation:

$$\bar{\mathbf{f}} = \mathbf{B}^o\ \mathbf{f}^o + \mathbf{B}^d\ \mathbf{f}^d + \mathbf{W}_1\mathbf{w}. \tag{18.A.20}$$

The nodal vectors are defined as follows:

$$\begin{cases} \mathbf{p}_1 = \boldsymbol{\rho} \\ \mathbf{p}_2 = \boldsymbol{\rho} + \mathbf{r}_1 \\ \mathbf{p}_3 = \hat{\boldsymbol{\rho}} \\ \mathbf{p}_4 = \hat{\boldsymbol{\rho}} + \mathbf{r}_2 \end{cases},$$

and

$$\hat{\boldsymbol{\rho}} = \boldsymbol{\rho} + \mathbf{r}_1 + \mathbf{t}_5 - \mathbf{r}_2.$$

We define

$$\begin{cases} \mathbf{q}_1 \triangleq \mathbf{p}_2 + \mathbf{p}_1 = 2\boldsymbol{\rho} + \mathbf{r}_1 \\ \mathbf{q}_2 \triangleq \mathbf{p}_2 - \mathbf{p}_1 = \mathbf{r}_1 \\ \mathbf{q}_3 \triangleq \mathbf{p}_4 + \mathbf{p}_3 = 2\hat{\boldsymbol{\rho}} + \mathbf{r}_2 = 2(\boldsymbol{\rho} + \mathbf{r}_1 + \mathbf{t}_5) - \mathbf{r}_2 \\ \mathbf{q}_4 \triangleq \mathbf{p}_4 - \mathbf{p}_3 = \mathbf{r}_2 \end{cases}$$

The relation between $\mathbf{q}$ and $\mathbf{p}$ can be written as follows:

$$\mathbf{q} = \begin{bmatrix} \mathbf{q}_1 \\ \mathbf{q}_2 \\ \mathbf{q}_3 \\ \mathbf{q}_4 \end{bmatrix} = \begin{bmatrix} \mathbf{I}_2 & \mathbf{I}_2 & \mathbf{0} & \mathbf{0} \\ -\mathbf{I}_2 & \mathbf{I}_2 & \mathbf{0} & \mathbf{0} \\ \mathbf{0} & \mathbf{0} & \mathbf{I}_2 & \mathbf{I}_2 \\ \mathbf{0} & \mathbf{0} & -\mathbf{I}_2 & \mathbf{I}_2 \end{bmatrix} \begin{bmatrix} \mathbf{p}_1 \\ \mathbf{p}_2 \\ \mathbf{p}_3 \\ \mathbf{p}_4 \end{bmatrix},$$

© 2002 by CRC Press LLC

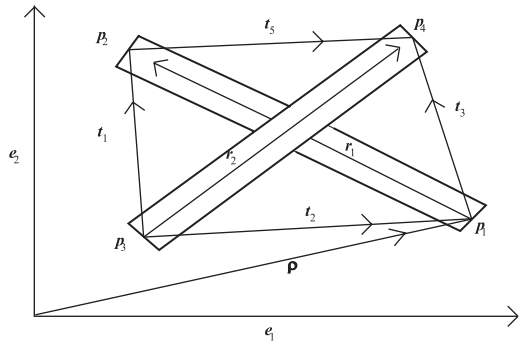

FIGURE 18.A.2 A planar tensegrity.

and

$$\mathbf{q} = \begin{bmatrix} \mathbf{q}_1 \\ \mathbf{q}_2 \\ \mathbf{q}_3 \\ \mathbf{q}_4 \end{bmatrix} = \begin{bmatrix} 2\mathbf{I}_2 & \mathbf{I}_2 & \mathbf{0} & \mathbf{0} \\ \mathbf{0} & \mathbf{I}_2 & \mathbf{0} & \mathbf{0} \\ 2\mathbf{I}_2 & 2\mathbf{I}_2 & -\mathbf{I}_2 & 2\mathbf{I}_2 \\ \mathbf{0} & \mathbf{0} & \mathbf{I}_2 & \mathbf{0} \end{bmatrix} \begin{bmatrix} \boldsymbol{\rho} \\ \mathbf{r}_1 \\ \mathbf{r}_2 \\ \mathbf{t}_5 \end{bmatrix} = \mathbf{Q}\mathbf{l}^o. \tag{18.A.21}$$

We can now write the dependent variables $\mathbf{l}^d$ in terms of independent variables $\mathbf{l}^o$. From (18.30) and (18.31):

$$\mathbf{t}_1 = \boldsymbol{\rho} + \mathbf{r}_1 - (\boldsymbol{\rho} + \mathbf{r}_1 + \mathbf{t}_5 - \mathbf{r}_2),$$

$$\mathbf{t}_2 = \boldsymbol{\rho} - (\boldsymbol{\rho} + \mathbf{r}_1 + \mathbf{t}_5 - \mathbf{r}_2).$$

By inspection of Figure 18.A.2, (18.30) and (18.31) reduce to:

$$\begin{aligned} \mathbf{t}_1 &= \mathbf{r}_2 - \mathbf{t}_5 \\ \mathbf{t}_2 &= -\mathbf{r}_1 + \mathbf{r}_2 - \mathbf{t}_5 \\ \mathbf{t}_3 &= \mathbf{r}_1 + \mathbf{t}_5, \end{aligned} \tag{18.A.22}$$

or,

$$\mathbf{I}^d = \begin{bmatrix} \mathbf{t}_1 \\ \mathbf{t}_2 \\ \mathbf{t}_3 \end{bmatrix} = \begin{bmatrix} \mathbf{0} & \mathbf{0} & \mathbf{I}_2 & -\mathbf{I}_2 \\ \mathbf{0} & -\mathbf{I}_2 & \mathbf{I}_2 & -\mathbf{I}_2 \\ \mathbf{0} & \mathbf{I}_2 & \mathbf{0} & \mathbf{I}_2 \end{bmatrix} \begin{bmatrix} \boldsymbol{\rho} \\ \mathbf{r}_1 \\ \mathbf{r}_2 \\ \mathbf{t}_5 \end{bmatrix}$$

Equation (18.A.21) yields

© 2002 by CRC Press LLC

$$\mathbf{l}^o = \begin{bmatrix} \boldsymbol{\rho} \\ \mathbf{r}_1 \\ \mathbf{r}_2 \\ \mathbf{t}_5 \end{bmatrix} = \frac{1}{2}\begin{bmatrix} \mathbf{I}_2 & -\mathbf{I}_2 & \mathbf{0} & \mathbf{0} \\ \mathbf{0} & 2\mathbf{I}_2 & \mathbf{0} & \mathbf{0} \\ \mathbf{0} & \mathbf{0} & \mathbf{0} & 2\mathbf{I}_2 \\ -\mathbf{I}_2 & -\mathbf{I}_2 & \mathbf{I}_2 & \mathbf{I}_2 \end{bmatrix} = \begin{bmatrix} \mathbf{q}_1 \\ \mathbf{q}_2 \\ \mathbf{q}_3 \\ \mathbf{q}_4 \end{bmatrix} = \mathbf{Q}^{-1}\mathbf{q}.$$

Hence,

$$\mathbf{l}^d = \frac{1}{2}\begin{bmatrix} \mathbf{I}_2 & \mathbf{I}_2 & -\mathbf{I}_2 & \mathbf{I}_2 \\ \mathbf{I}_2 & -\mathbf{I}_2 & -\mathbf{I}_2 & \mathbf{I}_2 \\ -\mathbf{I}_2 & \mathbf{I}_2 & \mathbf{I}_2 & \mathbf{I}_2 \end{bmatrix}\mathbf{q} = \mathbf{R}\mathbf{q}$$

We can now write out the tendon forces as follows:

$$\mathbf{f}^d = \begin{bmatrix} \mathbf{f}_1 \\ \mathbf{f}_2 \\ \mathbf{f}_3 \end{bmatrix} = -\begin{bmatrix} \mathbf{K}_1 \\ \mathbf{K}_2 \\ \mathbf{K}_3 \end{bmatrix}\mathbf{q} + \begin{bmatrix} \mathbf{b}_1 & & \\ & \mathbf{b}_2 & \\ & & \mathbf{b}_3 \end{bmatrix}\begin{bmatrix} u_1 \\ u_2 \\ u_3 \end{bmatrix},$$

or

$$\mathbf{f}^d = -\mathbf{K}^d\mathbf{q} + \mathbf{P}^d\mathbf{u}^d$$

and

$$\mathbf{f}^o = [\mathbf{f}_5] = -[\mathbf{K}_5]\ \mathbf{q} + [\mathbf{b}_5]\ [u_5],$$

or

$$\mathbf{f}^o = -\ \mathbf{K}^o\mathbf{q} + \mathbf{P}^o\mathbf{u}^o,$$

using the same definitions for **K** and **b** as found in (18.45) and (18.46), simply by removing the *ij* element indices. Substitution into (18.A.20) yields:

$$\begin{aligned} \bar{\mathbf{f}} &= \mathbf{B}^o(-\mathbf{K}^o\mathbf{q} + \mathbf{P}^o\mathbf{u}^o) + \mathbf{B}^d(-\mathbf{K}^d\mathbf{q} + \mathbf{P}^d\mathbf{u}^d) \\ &= -(\mathbf{B}^o\mathbf{K}^o + \mathbf{B}^d\mathbf{K}^d)\mathbf{q} + (\mathbf{B}^o\mathbf{P}^o\mathbf{u}^o + \mathbf{B}^d\mathbf{P}^d\mathbf{u}^d). \end{aligned}$$

With the matrices derived in this section, we can express the dynamics in the form of (18.20):

$$\ddot{\mathbf{q}} + (\mathbf{K}_r + \mathbf{K}_p)\mathbf{q} = \mathbf{B}\mathbf{u} + \mathbf{D}\mathbf{w},$$

$$\mathbf{K}_r = \boldsymbol{\Omega}_1,$$

$$\mathbf{K}_p = \mathbf{H}\tilde{\mathbf{K}},$$

$$\mathbf{B} = \mathbf{H}\tilde{\mathbf{B}},$$

© 2002 by CRC Press LLC

$$\mathbf{D} = \mathbf{H}\mathbf{W}^o = \mathbf{H}_1\mathbf{W}_1,$$

where

$$\mathbf{H} = \mathbf{H}_1 = \frac{2}{m}\begin{bmatrix} \mathbf{I}_2 & \mathbf{0} & \mathbf{0} & \mathbf{0} \\ \mathbf{0} & \frac{3}{L_1^2}\tilde{\mathbf{q}}_2^2 & \mathbf{0} & \mathbf{0} \\ \mathbf{0} & \mathbf{0} & \mathbf{I_2} & \mathbf{0} \\ \mathbf{0} & \mathbf{0} & \mathbf{0} & \frac{3}{L_2^2}\tilde{\mathbf{q}}_2^2 \end{bmatrix},$$

$$\mathbf{K}_r = \mathbf{\Omega}_1\begin{bmatrix} \mathbf{0} & \mathbf{0} & \mathbf{0} & \mathbf{0} \\ \mathbf{0} & L_1^{-2}\dot{\mathbf{q}}_2^T\dot{\mathbf{q}}_2\mathbf{I}_2 & \mathbf{0} & \mathbf{0} \\ \mathbf{0} & \mathbf{0} & \mathbf{0} & \mathbf{0} \\ \mathbf{0} & \mathbf{0} & \mathbf{0} & L_2^{-2}\dot{\mathbf{q}}_4^T\dot{\mathbf{q}}_4\mathbf{I}_4 \end{bmatrix},$$

$$\tilde{\mathbf{K}} \underline{\underline{\Delta}} \mathbf{B}^d\mathbf{K}^d + \mathbf{B}^o\mathbf{K}^o,$$

$$\tilde{\mathbf{B}} \underline{\underline{\Delta}} [\mathbf{B}^d\mathbf{P}^d, \mathbf{B}^o\mathbf{P}^o],$$

and

$$\tilde{\mathbf{q}}_2^2 = \begin{bmatrix} -q_{22}^2 & q_{21}q_{22} \\ q_{21}q_{22} & -q_{21}^2 \end{bmatrix}, \ \tilde{\mathbf{q}}_4^2 = \begin{bmatrix} -q_{42}^2 & q_{41}q_{42} \\ q_{41}q_{42} & -q_{41}^2 \end{bmatrix},$$

$$\dot{\mathbf{q}}_2^T\dot{\mathbf{q}}_2 = \dot{q}_{21}^2 + \dot{q}_{22}^2, \quad \dot{\mathbf{q}}_4^T\dot{\mathbf{q}}_4 = \dot{q}_{41}^2 + \dot{q}_{42}^2.$$

© 2002 by CRC Press LLC

Appendix 18.B Algebraic Inversion of the Q Matrix

This appendix will algebraically invert a 5×5 block $\mathbf{Q}$ matrix. Given $\mathbf{Q}$ in the form:

$$\mathbf{Q} = \begin{bmatrix} \mathbf{Q}_{11} & \mathbf{0} & \mathbf{0} & \mathbf{0} & \mathbf{0} \\ \mathbf{Q}_{21} & \mathbf{Q}_{22} & \mathbf{0} & \mathbf{0} & \mathbf{0} \\ \mathbf{Q}_{21} & \mathbf{Q}_{32} & \mathbf{Q}_{22} & \mathbf{0} & \mathbf{0} \\ \mathbf{Q}_{21} & \mathbf{Q}_{32} & \mathbf{Q}_{32} & \mathbf{Q}_{22} & \mathbf{0} \\ \mathbf{Q}_{21} & \mathbf{Q}_{32} & \mathbf{Q}_{32} & \mathbf{Q}_{32} & \mathbf{Q}_{22} \end{bmatrix} \tag{18.B.1}$$

we define $\mathbf{x}$ and $\mathbf{y}$ matrices so that

$$\mathbf{Qx} = \mathbf{y} \tag{18.B.2}$$

where

$$\mathbf{x} = \begin{bmatrix} \mathbf{x}_1 \\ \mathbf{x}_2 \\ \mathbf{x}_3 \\ \mathbf{x}_4 \\ \mathbf{x}_5 \end{bmatrix}, \ \mathbf{y} = \begin{bmatrix} \mathbf{y}_1 \\ \mathbf{y}_2 \\ \mathbf{y}_3 \\ \mathbf{y}_4 \\ \mathbf{y}_5 \end{bmatrix} \tag{18.B.3}$$

Solving (18.B.2) for $\mathbf{x}$ we obtain

$$\mathbf{x} = \mathbf{Q}^{-1}\mathbf{y} \tag{18.B.4}$$

Substituting (18.B.1) and (18.B.3) into (18.B.2) and carrying out the matrix operations we obtain

$$\begin{cases} \mathbf{Q}_{11}\mathbf{x}_1 & = \mathbf{y}_1 \\ \mathbf{Q}_{21}\mathbf{x}_1 + \mathbf{Q}_{22}\mathbf{x}_2 & = \mathbf{y}_2 \\ \mathbf{Q}_{21}\mathbf{x}_1 + \mathbf{Q}_{32}\mathbf{x}_2 + \mathbf{Q}_{22}\mathbf{x}_3 & = \mathbf{y}_3 \\ \mathbf{Q}_{21}\mathbf{x}_1 + \mathbf{Q}_{32}\mathbf{x}_2 + \mathbf{Q}_{32}\mathbf{x}_3 + \mathbf{Q}_{22}\mathbf{x}_4 & = \mathbf{y}_4 \\ \mathbf{Q}_{21}\mathbf{x}_1 + \mathbf{Q}_{32}\mathbf{x}_2 + \mathbf{Q}_{32}\mathbf{x}_3 + \mathbf{Q}_{32}\mathbf{x}_4 + \mathbf{Q}_{22}\mathbf{x}_5 & = \mathbf{y}_5 \end{cases} \tag{18.B.5}$$

Solving this system of equations for $\mathbf{x}$ will give us the desired $\mathbf{Q}^{-1}$ matrix. Solving each equation for $\mathbf{x}$ we have

$$\begin{cases} \mathbf{x}_1 = \mathbf{Q}_{11}^{-1}\mathbf{y}_1 \\ \mathbf{x}_2 = \mathbf{Q}_{22}^{-1}(-\mathbf{Q}_{21}\mathbf{x}_1 + \mathbf{y}_2) \\ \mathbf{x}_3 = \mathbf{Q}_{22}^{-1}(-\mathbf{Q}_{21}\mathbf{x}_1 - \mathbf{Q}_{32}\mathbf{x}_2 + \mathbf{y}_3) \\ \mathbf{x}_4 = \mathbf{Q}_{22}^{-1}(-\mathbf{Q}_{21}\mathbf{x}_1 - \mathbf{Q}_{32}\mathbf{x}_2 - \mathbf{Q}_{32}\mathbf{x}_3 + \mathbf{y}_4) \\ \mathbf{x}_5 = \mathbf{Q}_{22}^{-1}(-\mathbf{Q}_{21}\mathbf{x}_1 - \mathbf{Q}_{32}\mathbf{x}_2 - \mathbf{Q}_{32}\mathbf{x}_3 - \mathbf{Q}_{32}\mathbf{x}_4 + \mathbf{y}_5) \end{cases} \tag{18.B.6}$$

Elimination of $\mathbf{x}$ on the right side of (18.B.6) by substitution yields

© 2002 by CRC Press LLC

$$
\begin{cases}
\mathbf{x}_1 &= \mathbf{\Lambda}_{11}\mathbf{y}_1 \\
\mathbf{x}_2 &= \mathbf{\Lambda}_{21}\mathbf{y}_1 + \mathbf{\Lambda}_{22}\mathbf{y}_2 \\
\mathbf{x}_3 &= \mathbf{\Lambda}_{31}\mathbf{y}_1 + \mathbf{\Lambda}_{32}\mathbf{y}_2 + \mathbf{\Lambda}_{33}\mathbf{y}_3 \\
\mathbf{x}_4 &= \mathbf{\Lambda}_{41}\mathbf{y}_1 + \mathbf{\Lambda}_{42}\mathbf{y}_2 + \mathbf{\Lambda}_{43}\mathbf{y}_3 + \mathbf{\Lambda}_{44}\mathbf{y}_4 \\
\mathbf{x}_5 &= \mathbf{\Lambda}_{51}\mathbf{y}_1 + \mathbf{\Lambda}_{52}\mathbf{y}_2 + \mathbf{\Lambda}_{53}\mathbf{y}_3 + \mathbf{\Lambda}_{54}\mathbf{y}_4 + \mathbf{\Lambda}_{55}\mathbf{y}_5
\end{cases}
\tag{18.B.7}
$$

Or, in matrix form,

$$
\mathbf{Q}^{-1} = \begin{bmatrix}
\mathbf{\Lambda}_{11} & \mathbf{0} & \mathbf{0} & \mathbf{0} & \mathbf{0} \\
\mathbf{\Lambda}_{21} & \mathbf{\Lambda}_{22} & \mathbf{0} & \mathbf{0} & \mathbf{0} \\
\mathbf{\Lambda}_{31} & \mathbf{\Lambda}_{32} & \mathbf{\Lambda}_{33} & \mathbf{0} & \mathbf{0} \\
\mathbf{\Lambda}_{41} & \mathbf{\Lambda}_{42} & \mathbf{\Lambda}_{43} & \mathbf{\Lambda}_{44} & \mathbf{0} \\
\mathbf{\Lambda}_{51} & \mathbf{\Lambda}_{52} & \mathbf{\Lambda}_{53} & \mathbf{\Lambda}_{54} & \mathbf{\Lambda}_{55}
\end{bmatrix}
\tag{18.B.8}
$$

where we have used the notation $\Lambda_{row,\,column}$ with the following definitions

$$
\begin{aligned}
\mathbf{\Lambda}_{11} &= \mathbf{Q}_{11}^{-1} \\
\mathbf{\Lambda}_{21} &= -\mathbf{Q}_{22}^{-1}\mathbf{Q}_{21}\mathbf{Q}_{11}^{-1} = -\mathbf{Q}_{22}^{-1}\mathbf{Q}_{21}\mathbf{\Lambda}_{11} = -\mathbf{\Lambda}_{22}\mathbf{Q}_{21}\mathbf{\Lambda}_{11} \\
\mathbf{\Lambda}_{31} &= \mathbf{Q}_{22}^{-1}\mathbf{Q}_{32}\mathbf{Q}_{22}^{-1}\mathbf{Q}_{21}\mathbf{Q}_{11}^{-1} - \mathbf{Q}_{22}^{-1}\mathbf{Q}_{21}\mathbf{Q}_{11}^{-1} \\
\mathbf{\Lambda}_{41} &= -\mathbf{Q}_{22}^{-1}\mathbf{Q}_{32}\mathbf{Q}_{22}^{-1}\mathbf{Q}_{32}\mathbf{Q}_{22}^{-1}\mathbf{Q}_{21}\mathbf{Q}_{11}^{-1} + 2\mathbf{Q}_{22}^{-1}\mathbf{Q}_{32}\mathbf{Q}_{22}^{-1}\mathbf{Q}_{21}\mathbf{Q}_{11}^{-1} - \mathbf{Q}_{22}^{-1}\mathbf{Q}_{21}\mathbf{Q}_{11}^{-1} \\
\mathbf{\Lambda}_{51} &= -3\mathbf{Q}_{22}^{-1}\mathbf{Q}_{32}\mathbf{Q}_{22}^{-1}\mathbf{Q}_{32}\mathbf{Q}_{22}^{-1}\mathbf{Q}_{21}\mathbf{Q}_{11}^{-1} + 3\mathbf{Q}_{22}^{-1}\mathbf{Q}_{32}\mathbf{Q}_{22}^{-1}\mathbf{Q}_{21}\mathbf{Q}_{11}^{-1} \\
&\quad + \mathbf{Q}_{22}^{-1}\mathbf{Q}_{32}\mathbf{Q}_{22}^{-1}\mathbf{Q}_{32}\mathbf{Q}_{22}^{-1}\mathbf{Q}_{32}\mathbf{Q}_{22}^{-1}\mathbf{Q}_{21}\mathbf{Q}_{11}^{-1} - \mathbf{Q}_{22}^{-1}\mathbf{Q}_{21}\mathbf{Q}_{11}^{-1} \\
\mathbf{\Lambda}_{22} &= \mathbf{\Lambda}_{33} = \mathbf{\Lambda}_{44} = \mathbf{\Lambda}_{55} = \mathbf{Q}_{22}^{-1} \\
\mathbf{\Lambda}_{32} &= \mathbf{\Lambda}_{43} = \mathbf{\Lambda}_{54} = -\mathbf{Q}_{22}^{-1}\mathbf{Q}_{32}\mathbf{Q}_{22}^{-1} \\
\mathbf{\Lambda}_{42} &= \mathbf{\Lambda}_{53} = \mathbf{Q}_{22}^{-1}\mathbf{Q}_{32}\mathbf{Q}_{22}^{-1}\mathbf{Q}_{32}\mathbf{Q}_{22}^{-1} - \mathbf{Q}_{22}^{-1}\mathbf{Q}_{32}\mathbf{Q}_{22}^{-1} \\
\mathbf{\Lambda}_{52} &= -\mathbf{Q}_{22}^{-1}\mathbf{Q}_{32}\mathbf{Q}_{22}^{-1}\mathbf{Q}_{32}\mathbf{Q}_{22}^{-1}\mathbf{Q}_{32}\mathbf{Q}_{22}^{-1} + 2\mathbf{Q}_{22}^{-1}\mathbf{Q}_{32}\mathbf{Q}_{22}^{-1}\mathbf{Q}_{32}\mathbf{Q}_{22}^{-1} - \mathbf{Q}_{22}^{-1}\mathbf{Q}_{32}\mathbf{Q}_{22}^{-1}
\end{aligned}
$$

Using repeated patterns, the inverse may be computed by

$$
\mathbf{Q}^{-1} = \begin{bmatrix}
\mathbf{\Lambda}_{11} & & & & & & \\
\mathbf{\Lambda}_{21} & \mathbf{\Lambda}_{22} & & & & & \\
\mathbf{\Theta}\mathbf{\Lambda}_{21} & \mathbf{\Lambda}_{32} & \mathbf{\Lambda}_{22} & & & & \\
\mathbf{\Theta}^2\mathbf{\Lambda}_{21} & \mathbf{\Theta}\mathbf{\Lambda}_{32} & \mathbf{\Lambda}_{32} & \mathbf{\Lambda}_{22} & & & \\
\mathbf{\Theta}^3\mathbf{\Lambda}_{21} & \mathbf{\Theta}^2\mathbf{\Lambda}_{31} & \mathbf{\Theta}\mathbf{\Lambda}_{32} & \mathbf{\Lambda}_{32} & \mathbf{\Lambda}_{22} & & \\
\mathbf{\Theta}^4\mathbf{\Lambda}_{21} & \mathbf{\Theta}^3\mathbf{\Lambda}_{31} & \mathbf{\Theta}^2\mathbf{\Lambda}_{31} & \mathbf{\Theta}\mathbf{\Lambda}_{32} & \mathbf{\Lambda}_{32} & \mathbf{\Lambda}_{22} & \\
\vdots & \vdots & \ddots & \ddots & \ddots & \ddots & \ddots
\end{bmatrix}
\tag{18.B.9}
$$

© 2002 by CRC Press LLC

using

$$\mathbf{\Theta} = (\mathbf{I} - \mathbf{\Lambda}_{22}\mathbf{Q}_{32})$$

$$\mathbf{\Lambda}_{11} = \mathbf{Q}_{11}^{-1}$$

$$\mathbf{\Lambda}_{21} = -\mathbf{\Lambda}_{22}\mathbf{Q}_{21}\mathbf{\Lambda}_{11}$$

$$\mathbf{\Lambda}_{22} = \mathbf{Q}_{22}^{-1}$$

$$\mathbf{\Lambda}_{32} = -\mathbf{\Lambda}_{22}\mathbf{Q}_{32}\mathbf{\Lambda}_{22}.$$

Only $\mathbf{\Lambda}_{11}, \mathbf{\Lambda}_{22}, \mathbf{\Lambda}_{21}, \mathbf{\Lambda}_{32}$, and powers of Θ need to be calculated to obtain $\mathbf{Q}^{-1}$ for any (n, m). The only matrix inversion that needs to be computed to obtain $\mathbf{Q}^{-1}$ is $\mathbf{Q}_{11}^{-1}$ and $\mathbf{Q}_{22}^{-1}$, substantially reducing computer processing time for computer simulations.

© 2002 by CRC Press LLC

Appendix 18.C General Case for (n, m) = (i, 1)

In Appendix E the forces acting on each node are presented, making special exceptions for the case when ($j = m = 1$). The exceptions arise for ($j = m = 1$) because one stage now contains both closure rules for the base and the top of the structure. In the following synthesis we use $\hat{\mathbf{f}}_{111}$ and $\hat{\mathbf{f}}_{211}$ from (18.E.1) and $\hat{\mathbf{f}}_{311}$ and $\hat{\mathbf{f}}_{411}$ from (18.E.4). At the right, where ($i = 1$, $j = 1$):

$$\bar{\mathbf{f}}_{11} = \begin{bmatrix} \hat{\mathbf{f}}_{111} + \hat{\mathbf{f}}_{211} \\ \hat{\mathbf{f}}_{111} - \hat{\mathbf{f}}_{211} \\ \hat{\mathbf{f}}_{311} + \hat{\mathbf{f}}_{411} \\ \hat{\mathbf{f}}_{311} - \hat{\mathbf{f}}_{411} \end{bmatrix}$$

$$= \begin{bmatrix} (-\mathbf{f}_{211} + \mathbf{f}_{311} + \mathbf{f}_{1n1} + \mathbf{f}_{2n1} + \mathbf{w}_{111}) + (\mathbf{f}_{511} - \mathbf{f}_{111} - \mathbf{f}_{411} - \mathbf{f}_{811} + \mathbf{w}_{211}) \\ (-\mathbf{f}_{211} + \mathbf{f}_{311} + \mathbf{f}_{1n1} + \mathbf{f}_{2n1} + \mathbf{w}_{111}) - (\mathbf{f}_{511} - \mathbf{f}_{111} - \mathbf{f}_{411} - \mathbf{f}_{811} + \mathbf{w}_{211}) \\ (\mathbf{f}_{811} - \mathbf{f}_{711} - \mathbf{f}_{321} + \mathbf{f}_{421} + \mathbf{w}_{311}) + (\mathbf{f}_{611} - \mathbf{f}_{511} - \mathbf{f}_{6n1} + \mathbf{f}_{7n1} + \mathbf{w}_{411}) \\ (\mathbf{f}_{811} - \mathbf{f}_{711} - \mathbf{f}_{321} + \mathbf{f}_{421} + \mathbf{w}_{311}) - (\mathbf{f}_{611} - \mathbf{f}_{511} - \mathbf{f}_{6n1} + \mathbf{f}_{7n1} + \mathbf{w}_{411}) \end{bmatrix}.$$

At the center, where ($1 < i < n$, $j = 1$):

$$\bar{\mathbf{f}}_{i1} = \begin{bmatrix} \hat{\mathbf{f}}_{1i1} + \hat{\mathbf{f}}_{2i1} \\ \hat{\mathbf{f}}_{1i1} - \hat{\mathbf{f}}_{2i1} \\ \hat{\mathbf{f}}_{3i1} + \hat{\mathbf{f}}_{4i1} \\ \hat{\mathbf{f}}_{3i1} - \hat{\mathbf{f}}_{4i1} \end{bmatrix}$$

$$= \begin{bmatrix} (\mathbf{f}_{1(i-1)1} + \mathbf{f}_{2(i-1)1} - \mathbf{f}_{2i1} + \mathbf{f}_{3i1} + \mathbf{w}_{1i1}) + (-\mathbf{f}_{1i1} - \mathbf{f}_{4i1} + \mathbf{f}_{5i1} - \mathbf{f}_{8i1} + \mathbf{w}_{2i1}) \\ (\mathbf{f}_{1(i-1)1} + \mathbf{f}_{2(i-1)1} - \mathbf{f}_{2i1} + \mathbf{f}_{3i1} + \mathbf{w}_{1i1}) - (-\mathbf{f}_{1i1} - \mathbf{f}_{4i1} + \mathbf{f}_{5i1} - \mathbf{f}_{8i1} + \mathbf{w}_{2i1}) \\ (\mathbf{f}_{8i1} - \mathbf{f}_{7i1} - \mathbf{f}_{3(i+1)1} + \mathbf{f}_{4(i+1)1} + \mathbf{w}_{3i1}) + (-\mathbf{f}_{5i1} + \mathbf{f}_{6i1} - \mathbf{f}_{6(i-1)} + \mathbf{f}_{7(i-1)1} + \mathbf{w}_{4i1}) \\ (\mathbf{f}_{8i1} - \mathbf{f}_{7i1} - \mathbf{f}_{3(i+1)1} + \mathbf{f}_{4(i+1)1} + \mathbf{w}_{3i1}) - (-\mathbf{f}_{5i1} + \mathbf{f}_{6i1} - \mathbf{f}_{6(i-1)} + \mathbf{f}_{7(i-1)1} + \mathbf{w}_{4i1}) \end{bmatrix}.$$

At the left end of the base in Figure 18.5, where ($i = n$, $j = 1$):

$$\bar{\mathbf{f}}_{n1} = \begin{bmatrix} \hat{\mathbf{f}}_{1n1} + \hat{\mathbf{f}}_{2n1} \\ \hat{\mathbf{f}}_{1n1} - \hat{\mathbf{f}}_{2n1} \\ \hat{\mathbf{f}}_{3n1} + \hat{\mathbf{f}}_{4n1} \\ \hat{\mathbf{f}}_{3n1} - \hat{\mathbf{f}}_{4n1} \end{bmatrix}$$

$$= \begin{bmatrix} (\mathbf{f}_{1(n-1)1} + \mathbf{f}_{2(n-1)1} + \mathbf{f}_{3n1} - \mathbf{f}_{2n1} + \mathbf{w}_{1n1}) + (-\mathbf{f}_{1n1} - \mathbf{f}_{4n1} + \mathbf{f}_{5n1} - \mathbf{f}_{8n1} + \mathbf{w}_{2n1}) \\ (\mathbf{f}_{1(n-1)1} + \mathbf{f}_{2(n-1)1} + \mathbf{f}_{3n1} - \mathbf{f}_{2n1} + \mathbf{w}_{1n1}) - (-\mathbf{f}_{1n1} - \mathbf{f}_{4n1} + \mathbf{f}_{5n1} - \mathbf{f}_{8n1} + \mathbf{w}_{2n1}) \\ (-\mathbf{f}_{7n1} + \mathbf{f}_{8n1} - \mathbf{f}_{311} + \mathbf{f}_{411} + \mathbf{w}_{3n1}) + (-\mathbf{f}_{6(n-1)1} - \mathbf{f}_{5n1} + \mathbf{f}_{6n1} + \mathbf{f}_{7(n-1)1} + \mathbf{w}_{4n1}) \\ (-\mathbf{f}_{7n1} + \mathbf{f}_{8n1} - \mathbf{f}_{311} + \mathbf{f}_{411} + \mathbf{w}_{3n1}) - (-\mathbf{f}_{6(n-1)1} - \mathbf{f}_{5n1} + \mathbf{f}_{6n1} + \mathbf{f}_{7(n-1)1} + \mathbf{w}_{4n1}) \end{bmatrix}. \tag{18.C.1}$$

Using,

© 2002 by CRC Press LLC

$$\mathbf{f}_{ij}^{o} = \begin{bmatrix} \mathbf{f}_5 \\ \mathbf{f}_1 \end{bmatrix}_{ij}, \mathbf{f}_{ij}^{d} = \begin{bmatrix} \mathbf{f}_2 \\ \mathbf{f}_3 \\ \mathbf{f}_4 \\ \mathbf{f}_6 \\ \mathbf{f}_7 \\ \mathbf{f}_8 \\ \mathbf{f}_9 \\ \mathbf{f}_{10} \end{bmatrix}_{ij}, \mathbf{w}_{ij} = \begin{bmatrix} \mathbf{w}_1 \\ \mathbf{w}_2 \\ \mathbf{w}_3 \\ \mathbf{w}_4 \end{bmatrix}_{ij},$$

$$\bar{\mathbf{f}}_{11} = \begin{bmatrix} \mathbf{I}_3 & \mathbf{0} & \mathbf{0} & \mathbf{0} & \mathbf{0} & \mathbf{0} & \mathbf{0} & \mathbf{0} \\ \mathbf{I}_3 & \mathbf{0} & \mathbf{0} & \mathbf{0} & \mathbf{0} & \mathbf{0} & \mathbf{0} & \mathbf{0} \\ \mathbf{0} & \mathbf{0} & \mathbf{0} & -\mathbf{I}_3 & \mathbf{I}_3 & \mathbf{0} & \mathbf{0} & \mathbf{0} \\ \mathbf{0} & \mathbf{0} & \mathbf{0} & \mathbf{I}_3 & -\mathbf{I}_3 & \mathbf{0} & \mathbf{0} & \mathbf{0} \end{bmatrix} \mathbf{f}_{n1}^{d} + \begin{bmatrix} -\mathbf{I}_3 & \mathbf{I}_3 & -\mathbf{I}_3 & \mathbf{0} & \mathbf{0} & -\mathbf{I}_3 & \mathbf{0} & \mathbf{0} \\ -\mathbf{I}_3 & \mathbf{I}_3 & \mathbf{I}_3 & \mathbf{0} & \mathbf{0} & \mathbf{I}_3 & \mathbf{0} & \mathbf{0} \\ \mathbf{0} & \mathbf{0} & \mathbf{0} & \mathbf{I}_3 & -\mathbf{I}_3 & \mathbf{I}_3 & \mathbf{0} & \mathbf{0} \\ \mathbf{0} & \mathbf{0} & \mathbf{0} & -\mathbf{I}_3 & -\mathbf{I}_3 & \mathbf{I}_3 & \mathbf{0} & \mathbf{0} \end{bmatrix} \mathbf{f}_{11}^{d}$$

$$+ \begin{bmatrix} \mathbf{0} & \mathbf{0} & \mathbf{0} & \mathbf{0} & \mathbf{0} & \mathbf{0} & \mathbf{0} & \mathbf{0} \\ \mathbf{0} & \mathbf{0} & \mathbf{0} & \mathbf{0} & \mathbf{0} & \mathbf{0} & \mathbf{0} & \mathbf{0} \\ \mathbf{0} & -\mathbf{I}_3 & \mathbf{I}_3 & \mathbf{0} & \mathbf{0} & \mathbf{0} & \mathbf{0} & \mathbf{0} \\ \mathbf{0} & -\mathbf{I}_3 & \mathbf{I}_3 & \mathbf{0} & \mathbf{0} & \mathbf{0} & \mathbf{0} & \mathbf{0} \end{bmatrix} \mathbf{f}_{21}^{d} + \begin{bmatrix} \mathbf{I}_3 & -\mathbf{I}_3 \\ -\mathbf{I}_3 & \mathbf{I}_3 \\ -\mathbf{I}_3 & \mathbf{0} \\ \mathbf{I}_3 & \mathbf{0} \end{bmatrix} \mathbf{f}_{11}^{o} + \begin{bmatrix} \mathbf{I}_3 \\ \mathbf{I}_3 \\ \mathbf{0} \\ \mathbf{0} \end{bmatrix} \mathbf{f}_{1n1}$$

$$+ \begin{bmatrix} \mathbf{I}_3 & \mathbf{I}_3 & \mathbf{0} & \mathbf{0} \\ \mathbf{I}_3 & -\mathbf{I}_3 & \mathbf{0} & \mathbf{0} \\ \mathbf{0} & \mathbf{0} & \mathbf{I}_3 & \mathbf{I}_3 \\ \mathbf{0} & \mathbf{0} & \mathbf{I}_3 & -\mathbf{I}_3 \end{bmatrix} \mathbf{w}_{11}.$$

Or, in matrix notation, with the implied matrix definitions,

$$\bar{\mathbf{f}}_{11} = \hat{\mathbf{B}}_{n1}^{d} \mathbf{f}_{n1}^{d} + \mathbf{B}_{11}^{d} \mathbf{f}_{11}^{d} + \mathbf{B}_{21}^{d} \mathbf{f}_{21}^{d} + \mathbf{B}_{11}^{o} \mathbf{f}_{11}^{o} + \mathbf{B}_{1n1} \mathbf{f}_{1n1} + \mathbf{W} \mathbf{w}_{11}. \tag{18.C.2}$$

$$\bar{\mathbf{f}}_{i1} = \begin{bmatrix} \mathbf{I}_3 & \mathbf{0} & \mathbf{0} & \mathbf{0} & \mathbf{0} & \mathbf{0} & \mathbf{0} & \mathbf{0} \\ \mathbf{I}_3 & \mathbf{0} & \mathbf{0} & \mathbf{0} & \mathbf{0} & \mathbf{0} & \mathbf{0} & \mathbf{0} \\ \mathbf{0} & \mathbf{0} & \mathbf{0} & -\mathbf{I}_3 & \mathbf{I}_3 & \mathbf{0} & \mathbf{0} & \mathbf{0} \\ \mathbf{0} & \mathbf{0} & \mathbf{0} & \mathbf{I}_3 & -\mathbf{I}_3 & \mathbf{0} & \mathbf{0} & \mathbf{0} \end{bmatrix} \mathbf{f}_{(i-1)1}^{d} + \begin{bmatrix} -\mathbf{I}_3 & \mathbf{I}_3 & -\mathbf{I}_3 & \mathbf{0} & \mathbf{0} & -\mathbf{I}_3 & \mathbf{0} & \mathbf{0} \\ -\mathbf{I}_3 & \mathbf{I}_3 & \mathbf{I}_3 & \mathbf{0} & \mathbf{0} & \mathbf{I}_3 & \mathbf{0} & \mathbf{0} \\ \mathbf{0} & \mathbf{0} & \mathbf{0} & \mathbf{I}_3 & -\mathbf{I}_3 & \mathbf{I}_3 & \mathbf{0} & \mathbf{0} \\ \mathbf{0} & \mathbf{0} & \mathbf{0} & -\mathbf{I}_3 & -\mathbf{I}_3 & \mathbf{I}_3 & \mathbf{0} & \mathbf{0} \end{bmatrix} \mathbf{f}_{i1}^{d}$$

$$+ \begin{bmatrix} \mathbf{0} & \mathbf{0} & \mathbf{0} & \mathbf{0} & \mathbf{0} & \mathbf{0} & \mathbf{0} & \mathbf{0} \\ \mathbf{0} & \mathbf{0} & \mathbf{0} & \mathbf{0} & \mathbf{0} & \mathbf{0} & \mathbf{0} & \mathbf{0} \\ \mathbf{0} & -\mathbf{I}_3 & \mathbf{I}_3 & \mathbf{0} & \mathbf{0} & \mathbf{0} & \mathbf{0} & \mathbf{0} \\ \mathbf{0} & -\mathbf{I}_3 & \mathbf{I}_3 & \mathbf{0} & \mathbf{0} & \mathbf{0} & \mathbf{0} & \mathbf{0} \end{bmatrix} \mathbf{f}_{(i+1)1}^{d} + \begin{bmatrix} \mathbf{0} & \mathbf{I}_3 \\ \mathbf{0} & \mathbf{I}_3 \\ \mathbf{0} & \mathbf{0} \\ \mathbf{0} & \mathbf{0} \end{bmatrix} \mathbf{f}_{(i-1)1}^{o}$$

$$+ \begin{bmatrix} \mathbf{I}_3 & -\mathbf{I}_3 \\ -\mathbf{I}_3 & \mathbf{I}_3 \\ -\mathbf{I}_3 & \mathbf{0} \\ \mathbf{I}_3 & \mathbf{0} \end{bmatrix} \mathbf{f}_{i1}^{o} + \begin{bmatrix} \mathbf{I}_3 & \mathbf{I}_3 & \mathbf{0} & \mathbf{0} \\ \mathbf{I}_3 & -\mathbf{I}_3 & \mathbf{0} & \mathbf{0} \\ \mathbf{0} & \mathbf{0} & \mathbf{I}_3 & \mathbf{I}_3 \\ \mathbf{0} & \mathbf{0} & \mathbf{I}_3 & -\mathbf{I}_3 \end{bmatrix} \mathbf{w}_{i1}.$$

© 2002 by CRC Press LLC

Or, in matrix form,

$$\bar{\mathbf{f}}_{i1} = \hat{\mathbf{B}}_{01}^{d}\mathbf{f}_{(i-1)1}^{d} + \mathbf{B}_{11}^{d}\mathbf{f}_{i1}^{d} + \mathbf{B}_{21}^{d}\mathbf{f}_{(i+1)1}^{d} + \mathbf{B}_{01}^{o}\mathbf{f}_{(i-1)1}^{o} + \mathbf{B}_{11}^{o}\mathbf{f}_{i1}^{o} + \mathbf{W}\mathbf{w}_{i1}. \tag{18.C.3}$$

$$\bar{\mathbf{f}}_{n1} = \begin{bmatrix} \mathbf{I}_3 & \mathbf{0} & \mathbf{0} & \mathbf{0} & \mathbf{0} & \mathbf{0} & \mathbf{0} & \mathbf{0} \\ \mathbf{I}_3 & \mathbf{0} & \mathbf{0} & \mathbf{0} & \mathbf{0} & \mathbf{0} & \mathbf{0} & \mathbf{0} \\ \mathbf{0} & \mathbf{0} & \mathbf{0} & -\mathbf{I}_3 & \mathbf{I}_3 & \mathbf{0} & \mathbf{0} & \mathbf{0} \\ \mathbf{0} & \mathbf{0} & \mathbf{0} & \mathbf{I}_3 & -\mathbf{I}_3 & \mathbf{0} & \mathbf{0} & \mathbf{0} \end{bmatrix} \mathbf{f}_{(n-1)1}^{d} + \begin{bmatrix} -\mathbf{I}_3 & \mathbf{I}_3 & -\mathbf{I}_3 & \mathbf{0} & \mathbf{0} & -\mathbf{I}_3 & \mathbf{0} & \mathbf{0} \\ -\mathbf{I}_3 & \mathbf{I}_3 & \mathbf{I}_3 & \mathbf{0} & \mathbf{0} & \mathbf{I}_3 & \mathbf{0} & \mathbf{0} \\ \mathbf{0} & \mathbf{0} & \mathbf{0} & \mathbf{I}_3 & -\mathbf{I}_3 & \mathbf{I}_3 & \mathbf{0} & \mathbf{0} \\ \mathbf{0} & \mathbf{0} & \mathbf{0} & -\mathbf{I}_3 & -\mathbf{I}_3 & \mathbf{I}_3 & \mathbf{0} & \mathbf{0} \end{bmatrix} \mathbf{f}_{n1}^{d}$$

$$+ \begin{bmatrix} \mathbf{0} & \mathbf{0} & \mathbf{0} & \mathbf{0} & \mathbf{0} & \mathbf{0} & \mathbf{0} & \mathbf{0} \\ \mathbf{0} & \mathbf{0} & \mathbf{0} & \mathbf{0} & \mathbf{0} & \mathbf{0} & \mathbf{0} & \mathbf{0} \\ \mathbf{0} & -\mathbf{I}_3 & \mathbf{I}_3 & \mathbf{0} & \mathbf{0} & \mathbf{0} & \mathbf{0} & \mathbf{0} \\ \mathbf{0} & -\mathbf{I}_3 & \mathbf{I}_3 & \mathbf{0} & \mathbf{0} & \mathbf{0} & \mathbf{0} & \mathbf{0} \end{bmatrix} \mathbf{f}_{11}^{d} + \begin{bmatrix} \mathbf{0} & \mathbf{I}_3 \\ \mathbf{0} & \mathbf{I}_3 \\ \mathbf{0} & \mathbf{0} \\ \mathbf{0} & \mathbf{0} \end{bmatrix} \mathbf{f}_{(n-1)1}^{o} + \begin{bmatrix} \mathbf{I}_3 & \mathbf{0} \\ -\mathbf{I}_3 & \mathbf{0} \\ -\mathbf{I}_3 & \mathbf{0} \\ \mathbf{I}_3 & \mathbf{0} \end{bmatrix} \mathbf{f}_{nl}^{o}$$

$$+ \begin{bmatrix} -\mathbf{I}_3 \\ \mathbf{I}_3 \\ \mathbf{0} \\ \mathbf{0} \end{bmatrix} \mathbf{f}_{1n1} + \begin{bmatrix} \mathbf{I}_3 & \mathbf{I}_3 & \mathbf{0} & \mathbf{0} \\ \mathbf{I}_3 & -\mathbf{I}_3 & \mathbf{0} & \mathbf{0} \\ \mathbf{0} & \mathbf{0} & \mathbf{I}_3 & \mathbf{I}_3 \\ \mathbf{0} & \mathbf{0} & \mathbf{I}_3 & -\mathbf{I}_3 \end{bmatrix} \mathbf{w}_{n1}.$$

Or, in matrix form,

$$\bar{\mathbf{f}}_{n1} = \hat{\mathbf{B}}_{01}^{d}\mathbf{f}_{(n-1)1}^{d} + \mathbf{B}_{11}^{d}\mathbf{f}_{n1}^{d} + \mathbf{B}_{21}^{d}\mathbf{f}_{11}^{d} + \mathbf{B}_{01}^{o}\mathbf{f}_{(n-1)1}^{o} + \mathbf{B}_{n1}^{o}\mathbf{f}_{n1}^{o} + \overline{\mathbf{B}}_{1n1}\mathbf{f}_{1n1} + \mathbf{W}\mathbf{w}_{n1}. \tag{18.C.4}$$

Now assemble (18.C.2)–(18.C.4) into the form

$$\mathbf{f}_1 = \mathbf{B}_3\bar{\mathbf{f}}_1^{d} + \mathbf{B}_1\mathbf{f}_1^{o} + \mathbf{W}_1\mathbf{w}_1, \tag{18.C.5}$$

where

$$\mathbf{f}_j = \begin{bmatrix} \bar{\mathbf{f}}_{1j} \\ \bar{\mathbf{f}}_{2j} \\ \vdots \\ \bar{\mathbf{f}}_{nj} \end{bmatrix}, \ \bar{\mathbf{f}}_1^{d} = \begin{bmatrix} \mathbf{f}_{1n1} \\ \mathbf{f}_1^{d} \end{bmatrix}, \ \mathbf{f}_j^{o} = \begin{bmatrix} \mathbf{f}_{1j}^{o} \\ \mathbf{f}_{2j}^{o} \\ \vdots \\ \mathbf{f}_{nj}^{o} \end{bmatrix}, \ \mathbf{w}_j = \begin{bmatrix} \mathbf{w}_{1j} \\ \mathbf{w}_{2j} \\ \vdots \\ \mathbf{w}_{nj} \end{bmatrix}$$

$$\mathbf{B}_3 = \begin{bmatrix} \mathbf{B}_{1n1} & \mathbf{B}_{11}^{d} & \mathbf{B}_{21}^{d} & \mathbf{0} & \cdots & \mathbf{0} & \hat{\mathbf{B}}_{n1}^{d} \\ \mathbf{0} & \hat{\mathbf{B}}_{01}^{d} & \ddots & \ddots & \ddots & & \mathbf{0} \\ \vdots & \ddots & \ddots & \ddots & \ddots & \ddots & \vdots \\ \mathbf{0} & & \ddots & \ddots & \ddots & \ddots & \mathbf{0} \\ \mathbf{0} & \ddots & & \ddots & \ddots & \ddots & \mathbf{B}_{21}^{d} \\ \overline{\mathbf{B}}_{1n1} & \mathbf{B}_{21}^{d} & \mathbf{0} & \cdots & \mathbf{0} & \hat{\mathbf{B}}_{01}^{d} & \mathbf{B}_{11}^{d} \end{bmatrix}, \ \mathbf{B}_1 = \begin{bmatrix} \mathbf{B}_{11}^{o} & \mathbf{0} & \cdots & \cdots & \mathbf{0} \\ \mathbf{B}_{01}^{o} & \ddots & \ddots & & \vdots \\ \mathbf{0} & \ddots & \ddots & \ddots & \vdots \\ \vdots & \ddots & \ddots & \mathbf{B}_{11}^{o} & \mathbf{0} \\ \mathbf{0} & \cdots & \mathbf{0} & \mathbf{B}_{01}^{o} & \mathbf{B}_{n1}^{o} \end{bmatrix},$$

$$\mathbf{W}_1 = BlockDiag[\ldots, \mathbf{W}, \mathbf{W}, \ldots].$$

Or, simply, (18.C.5) has the form (18.E.21), where

© 2002 by CRC Press LLC

$$\mathbf{f} = \mathbf{f}_1, \mathbf{f}^d = \bar{\mathbf{f}}_1^d, \mathbf{f}^o = \mathbf{f}_1^o, \mathbf{w} = \mathbf{w}_1, \mathbf{W}^o = \mathbf{W}_1,$$

$$\mathbf{B}^d = \mathbf{B}_3, \mathbf{B}^o = \mathbf{B}_1.$$

The next set of necessary exceptions that apply to the model (i,1) arises in the form of the **R** matrix that relates the dependent tendons set to the generalized coordinates $(\mathbf{l}^d = \mathbf{Rq})$. For any (i,1) case **R** takes the form following the same procedure as in (18.32) and (18.33).

$$\mathbf{R} = \begin{bmatrix} \mathbf{R}_0 \\ \tilde{\mathbf{R}}_{11} \end{bmatrix}, \tag{18.C.6}$$

where

$$\tilde{\mathbf{R}}_{11} = \begin{bmatrix} \mathbf{E}_3 & \tilde{\mathbf{E}}_4 & \mathbf{0} & \cdots & \cdots & \mathbf{E}_2 \\ \mathbf{E}_2 & \mathbf{E}_3 & \tilde{\mathbf{E}}_4 & \ddots & & \mathbf{0} \\ \mathbf{0} & \mathbf{E}_2 & \mathbf{E}_3 & \tilde{\mathbf{E}}_4 & \ddots & \vdots \\ \vdots & \ddots & \mathbf{E}_2 & \mathbf{E}_3 & \tilde{\mathbf{E}}_4 & \mathbf{0} \\ \mathbf{0} & & \ddots & \ddots & \ddots & \tilde{\mathbf{E}}_4 \\ \tilde{\mathbf{E}}_4 & \mathbf{0} & \cdots & \mathbf{0} & \mathbf{E}_2 & \mathbf{E}_3 \end{bmatrix}$$

$$\tilde{\mathbf{E}}_4 = \frac{1}{2}\begin{bmatrix} -\mathbf{I}_3 & \mathbf{I}_3 & \mathbf{0} & \mathbf{0} \\ \mathbf{0} & \mathbf{0} & \mathbf{0} & \mathbf{0} \\ \mathbf{0} & \mathbf{0} & \mathbf{0} & \mathbf{0} \\ \mathbf{0} & \mathbf{0} & \mathbf{I}_3 & \mathbf{I}_3 \\ \mathbf{0} & \mathbf{0} & -\mathbf{I}_3 & -\mathbf{I}_3 \\ \mathbf{0} & \mathbf{0} & \mathbf{0} & \mathbf{0} \\ \mathbf{I}_3 & -\mathbf{I}_3 & \mathbf{0} & \mathbf{0} \\ \mathbf{0} & \mathbf{0} & \mathbf{I}_3 & \mathbf{I}_3 \end{bmatrix}.$$

The transformation matrix **T** that is applied to the control inputs takes the following form. The only exception to (18.55) is that there are no $\mathbf{I}_8$ blocks due to the fact that there are no stages between the boundary conditions at the base and the top of the structure. The second set of $\mathbf{I}_2$ blocks is also not needed since $m = 1$. Hence, the appropriate **T** matrix for $\tilde{u} = \mathbf{Tu}$ is

$$\mathbf{T} = \left[\begin{array}{ccc|ccc|c} 0 & \cdots & & & & & 01 \\ \hline \mathbf{T}_1' & & & \mathbf{S} & & & \\ & \ddots & & & \ddots & & \\ & & \mathbf{T}_1' & & & & \mathbf{S} \\ & & & \mathbf{I}_2 & & & \\ & & & & \ddots & & \\ & & & & & & \mathbf{I}_2 \end{array}\right] \in \boldsymbol{R}^{(10n+1)\times 8n},$$

where **S** is defined by (18.56), and

© 2002 by CRC Press LLC

$$\mathbf{T}_1' = \begin{bmatrix} 1 & 0 & 0 & 0 & 0 & 0 \\ 0 & 1 & 0 & 0 & 0 & 0 \\ 0 & 0 & 1 & 0 & 0 & 0 \\ 0 & 0 & 0 & 1 & 0 & 0 \\ 0 & 0 & 0 & 0 & 1 & 0 \\ 0 & 0 & 0 & 0 & 0 & 1 \\ 0 & 0 & 0 & 0 & 0 & 0 \\ 0 & 0 & 0 & 0 & -1 & 0 \end{bmatrix} \in \boldsymbol{R}^{8\times 6}.$$

There are n $\mathbf{T}_1'$ blocks, n $\mathbf{S}$ blocks, and n $\mathbf{I}_2$ blocks. The control inputs are now defined as

$$\mathbf{u} = \begin{bmatrix} \mathbf{u}_1^d \\ \mathbf{u}_1^o \end{bmatrix}.$$

The $\mathbf{u}_1^d$ block becomes

$$\mathbf{u}_1'^d = \begin{bmatrix} \mathbf{u}_{11}'^d \\ \mathbf{u}_{21}'^d \\ \mathbf{u}_{31}'^d \\ \vdots \\ \mathbf{u}_{n1}'^d \end{bmatrix}, \mathbf{u}_{i1}'^d = \begin{bmatrix} u_{2n1} \\ u_{3n1} \\ u_{4n1} \\ u_{6n1} \\ u_{7n1} \\ u_{8n1} \end{bmatrix} \in \boldsymbol{R}^{6\times 1},\ i = 1,\ 2,\ 3, \cdots n,\ j = m = 1$$

Appendix 18.D will explicitly show all matrix forms for the specific example $(n,m) = (3,1)$.

© 2002 by CRC Press LLC

Appendix 18.D Example Case (n,m) = (3,1)

Given the equation for the dynamics of the shell class of tensegrity structures:

$$\ddot{\mathbf{q}} + (\mathbf{K}_r(\dot{\mathbf{q}}) + \mathbf{K}_p(\mathbf{q}))\mathbf{q} = \mathbf{B}(\mathbf{q})\mathbf{u} + \mathbf{D}(\mathbf{q})\mathbf{w}.$$

We explicitly write out the matrices that define the problem:

$$\mathbf{q} = \mathbf{q}_1 = \begin{bmatrix} \mathbf{q}_{11} \\ \mathbf{q}_{21} \\ \mathbf{q}_{31} \end{bmatrix} = \begin{bmatrix} \mathbf{q}_{111} \\ \mathbf{q}_{211} \\ \mathbf{q}_{311} \\ \mathbf{q}_{411} \\ \hline \mathbf{q}_{121} \\ \mathbf{q}_{221} \\ \mathbf{q}_{321} \\ \mathbf{q}_{421} \\ \hline \mathbf{q}_{131} \\ \mathbf{q}_{231} \\ \mathbf{q}_{331} \\ \mathbf{q}_{431} \end{bmatrix} = \mathbf{Q}_{11}\mathbf{l}_1 = \begin{bmatrix} \mathbf{A} & \mathbf{0} & \mathbf{0} \\ \mathbf{D} & \mathbf{B} & \mathbf{0} \\ \mathbf{D} & \mathbf{E} & \mathbf{B} \end{bmatrix} \begin{bmatrix} \mathbf{l}_{11} \\ \mathbf{l}_{21} \\ \mathbf{l}_{31} \end{bmatrix} = \begin{bmatrix} \mathbf{A} & \mathbf{0} & \mathbf{0} \\ \mathbf{D} & \mathbf{B} & \mathbf{0} \\ \mathbf{D} & \mathbf{E} & \mathbf{B} \end{bmatrix} \begin{bmatrix} \boldsymbol{\rho}_{11} \\ \mathbf{r}_{111} \\ \mathbf{r}_{211} \\ \mathbf{r}_{511} \\ \mathbf{r}_{111} \\ \hline \mathbf{r}_{121} \\ \mathbf{r}_{221} \\ \mathbf{r}_{521} \\ \hline \mathbf{r}_{121} \\ \mathbf{r}_{131} \\ \mathbf{r}_{321} \\ \mathbf{r}_{531} \end{bmatrix},$$

where Q_{11} is (36×36). Furthermore,

$$\mathbf{K}_r(\dot{\mathbf{q}}) = \begin{bmatrix} \boldsymbol{\Omega}_{11} & \mathbf{0} & \mathbf{0} \\ \mathbf{0} & \boldsymbol{\Omega}_{21} & \mathbf{0} \\ \mathbf{0} & \mathbf{0} & \boldsymbol{\Omega}_{31} \end{bmatrix}$$

which is also a (36×36) matrix.

$$\mathbf{K}_p(\mathbf{q}) = \mathbf{H}\tilde{\mathbf{K}} = \mathbf{H}(\mathbf{B}^d\mathbf{K}^d + \mathbf{B}^o\mathbf{K}^o) = \mathbf{H}_1(\mathbf{B}_3\overline{\mathbf{K}}_1^d + \mathbf{B}_1^o\mathbf{K}_1^0)$$

$$\mathbf{K}_p = \begin{bmatrix} \mathbf{H}_{11} & \mathbf{0} & \mathbf{0} \\ \mathbf{0} & \mathbf{H}_{21} & \mathbf{0} \\ \mathbf{0} & \mathbf{0} & \mathbf{H}_{31} \end{bmatrix} \left(\begin{bmatrix} \mathbf{B}_{1n1} & \mathbf{B}_{11}^d & \mathbf{B}_{21}^d & \hat{\mathbf{B}}_{n1}^d \\ \mathbf{0} & \hat{\mathbf{B}}_{01}^d & \mathbf{B}_{11}^d & \mathbf{B}_{21}^d \\ \overline{\mathbf{B}}_{1n1} & \mathbf{B}_{21}^d & \hat{\mathbf{B}}_{01}^d & \mathbf{B}_{11}^d \end{bmatrix} \begin{bmatrix} \mathbf{K}_{131} \\ \mathbf{K}_{11}^d \\ \mathbf{K}_{21}^d \\ \mathbf{K}_{31}^d \end{bmatrix} \right.$$

$$\left. + \begin{bmatrix} \mathbf{B}_{11}^o & \mathbf{0} & \mathbf{0} \\ \mathbf{B}_{01}^o & \mathbf{B}_{11}^o & \mathbf{0} \\ \mathbf{0} & \mathbf{B}_{01}^o & \mathbf{B}_{n1}^o \end{bmatrix} \begin{bmatrix} \mathbf{K}_{11}^o \\ \mathbf{K}_{21}^o \\ \mathbf{K}_{31}^o \end{bmatrix} \right)$$

$$(36 \times 36) = (36 \times 36)\ [(36 \times 75) * (75 \times 36) + (36 \times 18) * (18 \times 36)]$$

In order to form $\overline{\mathbf{K}}_1^{d1}$, $\mathbf{R}$ is needed. In order to form $\mathbf{K}_1^o$, $\mathbf{Q}^{-1}$ is needed. Therefore, we obtain $\mathbf{R}$ as follows:

© 2002 by CRC Press LLC

$$\mathbf{l}^d = \mathbf{l}_1^d = \begin{bmatrix} \mathbf{t}_{131}^d \\ \mathbf{t}_1^d \end{bmatrix} = \mathbf{R}\mathbf{q} = \begin{bmatrix} \mathbf{R}_0 \\ \tilde{\mathbf{R}}_{11} \end{bmatrix} [\mathbf{q}_1],$$

$$\begin{bmatrix} \mathbf{t}_{131}^d \\ \hline \mathbf{t}_{11}^d \\ \mathbf{t}_{21}^d \\ \mathbf{t}_{31}^d \end{bmatrix} = \left[\begin{array}{ccc} \mathbf{E}_6 & \mathbf{0} & \mathbf{E}_7 \\ \hline \mathbf{E}_3 & \tilde{\mathbf{E}}_4 & \mathbf{E}_2 \\ \mathbf{E}_2 & \mathbf{E}_3 & \tilde{\mathbf{E}}_4 \\ \tilde{\mathbf{E}}_4 & \mathbf{E}_2 & \mathbf{E}_3 \end{array}\right] \begin{bmatrix} \mathbf{q}_{11} \\ \mathbf{q}_{21} \\ \mathbf{q}_{31} \end{bmatrix},$$

where the matrix is dimension (75×36).

$$\mathbf{B}(\mathbf{q}) = \mathbf{H}\tilde{\mathbf{B}}\mathbf{T} = \mathbf{H}[\mathbf{B}^d\mathbf{P}^d, \mathbf{B}^o\mathbf{P}^o]\mathbf{T}$$

$$\left[\mathbf{B}^d\mathbf{P}^d\right] = \left[\mathbf{B}_3\overline{\mathbf{P}}_1^d\right] = \begin{bmatrix} \mathbf{B}_{1n1} & \mathbf{B}_{11}^d & \mathbf{B}_{21}^d & \hat{\mathbf{B}}_{n1}^d \\ \mathbf{0} & \hat{\mathbf{B}}_{01}^d & \mathbf{B}_{11}^d & \mathbf{B}_{21}^d \\ \overline{\mathbf{B}}_{1n1} & \mathbf{B}_{21}^d & \hat{\mathbf{B}}_{01}^d & \mathbf{B}_{11}^d \end{bmatrix} \begin{bmatrix} \mathbf{P}_{1n1}^d & \mathbf{0} & \mathbf{0} & \mathbf{0} \\ \mathbf{0} & \mathbf{P}_{11}^d & \mathbf{0} & \mathbf{0} \\ \mathbf{0} & \mathbf{0} & \mathbf{P}_{21}^d & \mathbf{0} \\ \mathbf{0} & \mathbf{0} & \mathbf{0} & \mathbf{P}_{31}^d \end{bmatrix}$$

where the dimensions are $(36 \times 25) = (36 \times 75) * (75 \times 25)$.

$$\left[\mathbf{B}^o\mathbf{P}^o\right] = \left[\mathbf{B}_1\mathbf{P}_1^o\right] = \begin{bmatrix} \mathbf{B}_{11}^o & \mathbf{0} & \mathbf{0} \\ \mathbf{B}_{01}^o & \mathbf{B}_{11}^o & \mathbf{0} \\ \mathbf{0} & \mathbf{B}_{01}^o & \mathbf{B}_{n1}^o \end{bmatrix} \begin{bmatrix} \mathbf{P}_{11}^o & \mathbf{0} & \mathbf{0} \\ \mathbf{0} & \mathbf{P}_{21}^o & \mathbf{0} \\ \mathbf{0} & \mathbf{0} & \mathbf{P}_{31}^o \end{bmatrix}$$

and the dimensions are $(36 \times 6) = (36 \times 18) * (18 \times 6)$.

$$\mathbf{B} = \begin{bmatrix} \mathbf{H}_{11} & \mathbf{0} & \mathbf{0} \\ \mathbf{0} & \mathbf{H}_{21} & \mathbf{0} \\ \mathbf{0} & \mathbf{0} & \mathbf{H}_{31} \end{bmatrix} \left[\mathbf{B}_3\overline{\mathbf{P}}_1^d, \mathbf{B}_1\mathbf{P}_1^o\right] \left[\begin{array}{ccccc|c} 0 & \cdots & & \cdots & 0 & 01 \\ \hline \mathbf{T}_1' & \mathbf{0} & \mathbf{0} & \mathbf{S} & \mathbf{0} & \mathbf{0} \\ \mathbf{0} & \mathbf{T}_1' & \mathbf{0} & \mathbf{0} & \mathbf{S} & \mathbf{0} \\ \mathbf{0} & \mathbf{0} & \mathbf{T}_1' & \mathbf{0} & \mathbf{0} & \mathbf{S} \\ \mathbf{0} & \mathbf{0} & \mathbf{0} & \mathbf{I}_2 & \mathbf{0} & \mathbf{0} \\ \mathbf{0} & \mathbf{0} & \mathbf{0} & \mathbf{0} & \mathbf{I}_2 & \mathbf{0} \\ \mathbf{0} & \mathbf{0} & \mathbf{0} & \mathbf{0} & \mathbf{0} & \mathbf{I}_2 \end{array}\right]$$

and the dimensions are $(36 \times 24) = (36 \times 36) * (36 \times 31) * (31 \times 24)$.

The control inputs $u_{\alpha ij}$ are defined as

$$\mathbf{u} = \begin{bmatrix} \mathbf{u}^d \\ \mathbf{u}^o \end{bmatrix} = \begin{bmatrix} \mathbf{u}_1'^d \\ \mathbf{u}_1^o \end{bmatrix} = \begin{bmatrix} \mathbf{u}_{11}'^d \\ \mathbf{u}_{21}'^d \\ \mathbf{u}_{31}'^d \\ \mathbf{u}_{11}^o \\ \mathbf{u}_{21}^o \\ \mathbf{u}_{31}^o \end{bmatrix} \quad (24 \times 1)$$

© 2002 by CRC Press LLC

where

$$\mathbf{u}_{i1}'^{d} = \begin{bmatrix} u_{2n1} \\ u_{3n1} \\ u_{4n1} \\ u_{6n1} \\ u_{7n1} \\ u_{8n1} \end{bmatrix} \in \boldsymbol{R}^{6\times 1},\ \ i = 1,\ 2,\ 3\ \ j = 1.$$

$$\mathbf{Bu} \in \boldsymbol{R}^{(36\times 1)}.$$

The external forces applied to the nodes arise in the product **Dw**, where

$$\mathbf{D}(\mathbf{q}) = \mathbf{HW}^{o} = \mathbf{H}\left[\mathbf{W}_1\right] = \begin{bmatrix} \mathbf{H}_{11} & \mathbf{0} & \mathbf{0} \\ \mathbf{0} & \mathbf{H}_{21} & \mathbf{0} \\ \mathbf{0} & \mathbf{0} & \mathbf{H}_{31} \end{bmatrix} \begin{bmatrix} \mathbf{W} & \mathbf{0} & \mathbf{0} \\ \mathbf{0} & \mathbf{W} & \mathbf{0} \\ \mathbf{0} & \mathbf{0} & \mathbf{W} \end{bmatrix}$$

with dimensions: $(36 \times 36) = (36 \times 36) * (36 \times 36)$.

$$\mathbf{w} = \ \mathbf{w}_1 = \begin{bmatrix} \mathbf{w}_{11} \\ \mathbf{w}_{21} \\ \mathbf{w}_{31} \end{bmatrix} (36\times 1)$$

so

$$\mathbf{Dw} \in \boldsymbol{R}^{\ (36\times 1)}.$$

© 2002 by CRC Press LLC

Appendix 18.E Nodal Forces

At the base, right end of Figure 18.5, where ($i = 1$, $j = 1$):

$$\bar{\mathbf{f}}_{11} = \begin{bmatrix} \hat{\mathbf{f}}_{111} + \hat{\mathbf{f}}_{211} \\ \hat{\mathbf{f}}_{111} - \hat{\mathbf{f}}_{211} \\ \hat{\mathbf{f}}_{311} + \hat{\mathbf{f}}_{411} \\ \hat{\mathbf{f}}_{311} - \hat{\mathbf{f}}_{411} \end{bmatrix}$$

$$= \begin{bmatrix} (-\mathbf{f}_{211} + \mathbf{f}_{311} + \mathbf{f}_{1n1} + \mathbf{f}_{2n1} + \mathbf{w}_{111}) + (\mathbf{f}_{511} - \mathbf{f}_{111} - \mathbf{f}_{411} - \mathbf{f}_{811} + \mathbf{w}_{211}) \\ (-\mathbf{f}_{211} + \mathbf{f}_{311} + \mathbf{f}_{1n1} + \mathbf{f}_{2n1} + \mathbf{w}_{111}) - (\mathbf{f}_{511} - \mathbf{f}_{111} - \mathbf{f}_{411} - \mathbf{f}_{811} + \mathbf{w}_{211}) \\ (\mathbf{f}_{811} - \mathbf{f}_{711} + \mathbf{f}_{1011} - \mathbf{f}_{321} + \mathbf{f}_{42\,1} + \mathbf{w}_{311}) + (\mathbf{f}_{611} - \mathbf{f}_{511} + \mathbf{f}_{212} + \mathbf{f}_{112} + \mathbf{w}_{411}) \\ (\mathbf{f}_{811} - \mathbf{f}_{711} + \mathbf{f}_{1011} - \mathbf{f}_{321} + \mathbf{f}_{42\,1} + \mathbf{w}_{311}) - (\mathbf{f}_{611} - \mathbf{f}_{511} + \mathbf{f}_{212} + \mathbf{f}_{112} + \mathbf{w}_{411}) \end{bmatrix}$$

At the center of the base, where ($1 < i < n$, $j = 1$):

$$\bar{\mathbf{f}}_{i1} = \begin{bmatrix} \hat{\mathbf{f}}_{1i1} + \hat{\mathbf{f}}_{2i1} \\ \hat{\mathbf{f}}_{1i1} - \hat{\mathbf{f}}_{2i1} \\ \hat{\mathbf{f}}_{3i1} + \hat{\mathbf{f}}_{4i1} \\ \hat{\mathbf{f}}_{3i1} - \hat{\mathbf{f}}_{4i1} \end{bmatrix}$$

$$= \begin{bmatrix} (\mathbf{f}_{1(i-1)1} + \mathbf{f}_{2(i-1)1} - \mathbf{f}_{2i1} + \mathbf{f}_{3i1} + \mathbf{w}_{1i1}) + (-\mathbf{f}_{1i1} - \mathbf{f}_{4i1} + \mathbf{f}_{5i1} - \mathbf{f}_{8i1} + \mathbf{w}_{2i1}) \\ (\mathbf{f}_{1(i-1)1} + \mathbf{f}_{2(i-1)1} - \mathbf{f}_{2i1} + \mathbf{f}_{3i1} + \mathbf{w}_{1i1}) - (-\mathbf{f}_{1i1} - \mathbf{f}_{4i1} - \mathbf{f}_{5i1} - \mathbf{f}_{8i1} + \mathbf{w}_{2i1}) \\ (\mathbf{f}_{8i1} - \mathbf{f}_{7i1} + \mathbf{f}_{10i1} - \mathbf{f}_{3(i+1)1} + \mathbf{f}_{4(i+1)1} + \mathbf{w}_{3i1}) + (-\mathbf{f}_{5i1} + \mathbf{f}_{6i1} - \mathbf{f}_{10(i-1)} + \mathbf{f}_{1i2} + \mathbf{f}_{2i2} + \mathbf{w}_{4i1}) \\ (\mathbf{f}_{8i1} - \mathbf{f}_{7i1} + \mathbf{f}_{10i1} - \mathbf{f}_{3(i+1)1} + \mathbf{f}_{4(i+1)1} + \mathbf{w}_{3i1}) - (-\mathbf{f}_{5i1} + \mathbf{f}_{6i1} - \mathbf{f}_{10(i-1)} + \mathbf{f}_{1i2} + \mathbf{f}_{2i2} + \mathbf{w}_{4i1}) \end{bmatrix}$$

At the left end of the base in Figure 18.5, where ($i = n$, $j = 1$):

$$\bar{\mathbf{f}}_{n1} = \begin{bmatrix} \hat{\mathbf{f}}_{1n1} + \hat{\mathbf{f}}_{2n1} \\ \hat{\mathbf{f}}_{1n1} - \hat{\mathbf{f}}_{2n1} \\ \hat{\mathbf{f}}_{3n1} + \hat{\mathbf{f}}_{4n1} \\ \hat{\mathbf{f}}_{3n1} - \hat{\mathbf{f}}_{4n1} \end{bmatrix}$$

$$= \begin{bmatrix} (\mathbf{f}_{1(n-1)1} + \mathbf{f}_{2(n-1)1} + \mathbf{f}_{3n1} - \mathbf{f}_{2n1} + \mathbf{w}_{1n1}) + (-\mathbf{f}_{1n1} - \mathbf{f}_{4n1} + \mathbf{f}_{5n1} - \mathbf{f}_{8n1} + \mathbf{w}_{2n1}) \\ (\mathbf{f}_{1(n-1)1} + \mathbf{f}_{2(n-1)1} + \mathbf{f}_{3n1} - \mathbf{f}_{2n1} + \mathbf{w}_{1n1}) - (-\mathbf{f}_{1n1} - \mathbf{f}_{4n1} + \mathbf{f}_{5n1} - \mathbf{f}_{8n1} + \mathbf{w}_{2n1}) \\ (-\mathbf{f}_{7n1} + \mathbf{f}_{8n1} + \mathbf{f}_{10n1} - \mathbf{f}_{311} + \mathbf{f}_{411} + \mathbf{w}_{3n1}) + (-\mathbf{f}_{10(n-1)1} - \mathbf{f}_{5n1} + \mathbf{f}_{6n1} + \mathbf{f}_{1n2} + \mathbf{f}_{2n2} + \mathbf{w}_{4n1}) \\ (-\mathbf{f}_{7n1} + \mathbf{f}_{8n1} + \mathbf{f}_{10n1} - \mathbf{f}_{311} + \mathbf{f}_{411} + \mathbf{w}_{3n1}) - (-\mathbf{f}_{10(n-1)1} - \mathbf{f}_{5n1} + \mathbf{f}_{6n1} + \mathbf{f}_{1n2} + \mathbf{f}_{2n2} + \mathbf{w}_{4n1}) \end{bmatrix} \quad (18.E.1)$$

At the second stage, where ($1 \le i \le n$, $j = 2$):

© 2002 by CRC Press LLC

$$\bar{\mathbf{f}}_{12} = \begin{bmatrix} \hat{\mathbf{f}}_{112} + \hat{\mathbf{f}}_{212} \\ \hat{\mathbf{f}}_{112} - \hat{\mathbf{f}}_{212} \\ \hat{\mathbf{f}}_{312} + \hat{\mathbf{f}}_{412} \\ \hat{\mathbf{f}}_{312} - \hat{\mathbf{f}}_{412} \end{bmatrix}$$

$$= \begin{bmatrix} \left(-\mathbf{f}_{6n1} + \mathbf{f}_{7n1} - \mathbf{f}_{9n2} - \mathbf{f}_{212} + \mathbf{f}_{312} + \mathbf{w}_{112}\right) + \left(-\mathbf{f}_{112} - \mathbf{f}_{412} + \mathbf{f}_{512} - \mathbf{f}_{812} + \mathbf{f}_{912} + \mathbf{w}_{212}\right) \\ \left(-\mathbf{f}_{6n1} + \mathbf{f}_{7n1} - \mathbf{f}_{9n2} - \mathbf{f}_{212} + \mathbf{f}_{312} + \mathbf{w}_{112}\right) - \left(-\mathbf{f}_{112} - \mathbf{f}_{412} + \mathbf{f}_{512} - \mathbf{f}_{812} + \mathbf{f}_{912} + \mathbf{w}_{212}\right) \\ \left(-\mathbf{f}_{712} + \mathbf{f}_{812} + \mathbf{f}_{1012} - \mathbf{f}_{322} + \mathbf{f}_{422} + \mathbf{w}_{312}\right) + \left(-\mathbf{f}_{512} + \mathbf{f}_{612} - \mathbf{f}_{10n2} + \mathbf{f}_{113} + \mathbf{f}_{213} + \mathbf{w}_{412}\right) \\ \left(-\mathbf{f}_{712} + \mathbf{f}_{812} + \mathbf{f}_{1012} - \mathbf{f}_{322} + \mathbf{f}_{422} + \mathbf{w}_{312}\right) - \left(-\mathbf{f}_{512} + \mathbf{f}_{612} - \mathbf{f}_{10n2} + \mathbf{f}_{113} + \mathbf{f}_{213} + \mathbf{w}_{412}\right) \end{bmatrix}$$

$$\bar{\mathbf{f}}_{i2} = \begin{bmatrix} \hat{\mathbf{f}}_{1i2} + \hat{\mathbf{f}}_{2i2} \\ \hat{\mathbf{f}}_{1i2} - \hat{\mathbf{f}}_{2i2} \\ \hat{\mathbf{f}}_{3i2} + \hat{\mathbf{f}}_{4i2} \\ \hat{\mathbf{f}}_{3i2} - \hat{\mathbf{f}}_{4i2} \end{bmatrix} \tag{18.E.2}$$

$$= \begin{bmatrix} \left(-\mathbf{f}_{6(i-1)1} + \mathbf{f}_{7(i-1)1} - \mathbf{f}_{9(i-1)2} - \mathbf{f}_{2i2} + \mathbf{f}_{3i2} + \mathbf{w}_{1i2}\right) + \left(-\mathbf{f}_{1i2} - \mathbf{f}_{4i2} + \mathbf{f}_{5i2} - \mathbf{f}_{8i2} + \mathbf{f}_{9i2} + \mathbf{w}_{2i2}\right) \\ \left(-\mathbf{f}_{6(i-1)1} + \mathbf{f}_{7(i-1)1} - \mathbf{f}_{9(i-1)2} - \mathbf{f}_{2i2} + \mathbf{f}_{3i2} + \mathbf{w}_{1i2}\right) - \left(-\mathbf{f}_{1i2} - \mathbf{f}_{4i2} + \mathbf{f}_{5i2} - \mathbf{f}_{8i2} + \mathbf{f}_{9i2} + \mathbf{w}_{2i2}\right) \\ \left(-\mathbf{f}_{7i2} + \mathbf{f}_{8i2} + \mathbf{f}_{10i2} - \mathbf{f}_{3(i+1)2} + \mathbf{f}_{4(i+1)2} + \mathbf{w}_{3i2}\right) + \left(-\mathbf{f}_{5i2} + \mathbf{f}_{6i2} - \mathbf{f}_{10(i-1)2} + \mathbf{f}_{1i3} + \mathbf{f}_{2i3} + \mathbf{w}_{4i2}\right) \\ \left(-\mathbf{f}_{7i2} + \mathbf{f}_{8i2} + \mathbf{f}_{10i2} - \mathbf{f}_{3(i+1)2} + \mathbf{f}_{4(i+1)2} + \mathbf{w}_{3i2}\right) - \left(-\mathbf{f}_{5i2} + \mathbf{f}_{6i2} - \mathbf{f}_{10(i-1)2} + \mathbf{f}_{1i3} + \mathbf{f}_{2i3} + \mathbf{w}_{4i2}\right) \end{bmatrix}$$

$$\bar{\mathbf{f}}_{n2} = \begin{bmatrix} \hat{\mathbf{f}}_{1n2} + \hat{\mathbf{f}}_{2n2} \\ \hat{\mathbf{f}}_{1n2} - \hat{\mathbf{f}}_{2n2} \\ \hat{\mathbf{f}}_{3n2} + \hat{\mathbf{f}}_{4n2} \\ \hat{\mathbf{f}}_{3n2} - \hat{\mathbf{f}}_{4n2} \end{bmatrix}$$

$$= \begin{bmatrix} \left(-\mathbf{f}_{6(n-1)1} + \mathbf{f}_{7(n-1)1} - \mathbf{f}_{9(n-1)2} - \mathbf{f}_{2n2} + \mathbf{f}_{3n2} + \mathbf{w}_{1n2}\right) + \left(-\mathbf{f}_{1n2} - \mathbf{f}_{4n2} + \mathbf{f}_{5n2} - \mathbf{f}_{8n2} + \mathbf{f}_{9n2} + \mathbf{w}_{2n2}\right) \\ \left(-\mathbf{f}_{6(n-1)1} + \mathbf{f}_{7(n-1)1} - \mathbf{f}_{9(n-1)2} - \mathbf{f}_{2n2} + \mathbf{f}_{3n2} + \mathbf{w}_{1n2}\right) - \left(-\mathbf{f}_{1n2} - \mathbf{f}_{4n2} + \mathbf{f}_{5n2} - \mathbf{f}_{8n2} + \mathbf{f}_{9n2} + \mathbf{w}_{2n2}\right) \\ \left(-\mathbf{f}_{7n2} + \mathbf{f}_{8n2} + \mathbf{f}_{10n2} - \mathbf{f}_{312} + \mathbf{f}_{412} + \mathbf{w}_{3n2}\right) + \left(-\mathbf{f}_{5n2} + \mathbf{f}_{6n2} - \mathbf{f}_{10(n-1)2} + \mathbf{f}_{1n3} + \mathbf{f}_{2n3} + \mathbf{w}_{4n2}\right) \\ \left(-\mathbf{f}_{7n2} + \mathbf{f}_{8n2} + \mathbf{f}_{10n2} - \mathbf{f}_{312} + \mathbf{f}_{412} + \mathbf{w}_{3n2}\right) - \left(-\mathbf{f}_{5n2} + \mathbf{f}_{6n2} - \mathbf{f}_{10(n-1)2} + \mathbf{f}_{1n3} + \mathbf{f}_{2n3} + \mathbf{w}_{4n2}\right) \end{bmatrix}$$

At the typical stage ($1 \le j < m$, $1 \le i \le n$):

$$\bar{\mathbf{f}}_{1j} = \begin{bmatrix} \hat{\mathbf{f}}_{11j} + \hat{\mathbf{f}}_{21j} \\ \hat{\mathbf{f}}_{11j} - \hat{\mathbf{f}}_{21j} \\ \hat{\mathbf{f}}_{31j} + \hat{\mathbf{f}}_{41j} \\ \hat{\mathbf{f}}_{31j} - \hat{\mathbf{f}}_{41j} \end{bmatrix}$$

$$= \begin{bmatrix} \left(-\mathbf{f}_{6n(j-1)} + \mathbf{f}_{7n(j-1)} - \mathbf{f}_{9nj} - \mathbf{f}_{21j} + \mathbf{f}_{31j} + \mathbf{w}_{11j}\right) + \left(-\mathbf{f}_{11j} - \mathbf{f}_{41j} + \mathbf{f}_{51} - \mathbf{f}_{81j} + \mathbf{f}_{91j} + \mathbf{w}_{21j}\right) \\ \left(-\mathbf{f}_{6n(j-1)} + \mathbf{f}_{7n(j-1)} - \mathbf{f}_{9nj} - \mathbf{f}_{21j} + \mathbf{f}_{31j} + \mathbf{w}_{11j}\right) - \left(-\mathbf{f}_{11j} - \mathbf{f}_{41j} + \mathbf{f}_{51j} - \mathbf{f}_{81j} + \mathbf{f}_{91j} + \mathbf{w}_{21j}\right) \\ \left(-\mathbf{f}_{71j} + \mathbf{f}_{81j} + \mathbf{f}_{101j} - \mathbf{f}_{32j} + \mathbf{f}_{42j} + \mathbf{w}_{31j}\right) + \left(-\mathbf{f}_{51j} + \mathbf{f}_{61j} - \mathbf{f}_{10nj} + \mathbf{f}_{11(j+1)} + \mathbf{f}_{21(j+1)} + \mathbf{w}_{41j}\right) \\ \left(-\mathbf{f}_{71j} + \mathbf{f}_{81j} + \mathbf{f}_{101j} - \mathbf{f}_{32j} + \mathbf{f}_{42j} + \mathbf{w}_{31j}\right) - \left(-\mathbf{f}_{51j} + \mathbf{f}_{61j} - \mathbf{f}_{10nj} + \mathbf{f}_{11(j+1)} + \mathbf{f}_{21(j+1)} + \mathbf{w}_{41j}\right) \end{bmatrix}$$

© 2002 by CRC Press LLC

$$\bar{\mathbf{f}}_{ij} = \begin{bmatrix} \hat{\mathbf{f}}_{1ij} + \hat{\mathbf{f}}_{2ij} \\ \hat{\mathbf{f}}_{1ij} - \hat{\mathbf{f}}_{2ij} \\ \hat{\mathbf{f}}_{3ij} + \hat{\mathbf{f}}_{4ij} \\ \hat{\mathbf{f}}_{3ij} - \hat{\mathbf{f}}_{4ij} \end{bmatrix}$$

$$= \begin{bmatrix} (-\mathbf{f}_{6(i-1)(j-1)} + \mathbf{f}_{7(i-1)(j-1)} - \mathbf{f}_{9(i-1)j} - \mathbf{f}_{2ij} + \mathbf{f}_{3ij} + \mathbf{w}_{1ij}) + (-\mathbf{f}_{1ij} - \mathbf{f}_{4ij} + \mathbf{f}_{5ij} - \mathbf{f}_{8ij} + \mathbf{f}_{9ij} + \mathbf{w}_{2ij}) \\ (-\mathbf{f}_{6(i-1)(j-1)} + \mathbf{f}_{7(i-1)(j-1)} - \mathbf{f}_{9(i-1)j} - \mathbf{f}_{2ij} + \mathbf{f}_{3ij} + \mathbf{w}_{1ij}) - (-\mathbf{f}_{1ij} - \mathbf{f}_{4ij} + \mathbf{f}_{5ij} - \mathbf{f}_{8ij} + \mathbf{f}_{9ij} + \mathbf{w}_{2ij}) \\ (-\mathbf{f}_{7ij} + \mathbf{f}_{8ij} + \mathbf{f}_{10ij} - \mathbf{f}_{3(i+1)j} + \mathbf{f}_{4(i+1)j} + \mathbf{w}_{3ij}) + (-\mathbf{f}_{5ij} + \mathbf{f}_{6ij} - \mathbf{f}_{10(i-1)j} + \mathbf{f}_{1i(j+1)} + \mathbf{f}_{2i(j+1)} + \mathbf{w}_{4ij}) \\ (-\mathbf{f}_{7ij} + \mathbf{f}_{8ij} + \mathbf{f}_{10ij} - \mathbf{f}_{3(i+1)j} + \mathbf{f}_{4(i+1)j} + \mathbf{w}_{3ij}) - (-\mathbf{f}_{5ij} + \mathbf{f}_{6ij} - \mathbf{f}_{10(i-1)j} + \mathbf{f}_{1i(j+1)} + \mathbf{f}_{2i(j+1)} + \mathbf{w}_{4ij}) \end{bmatrix} \quad (18.E.3)$$

$$\bar{\mathbf{f}}_{nj} = \begin{bmatrix} \hat{\mathbf{f}}_{1nj} + \hat{\mathbf{f}}_{2nj} \\ \hat{\mathbf{f}}_{1nj} - \hat{\mathbf{f}}_{2nj} \\ \hat{\mathbf{f}}_{3nj} + \hat{\mathbf{f}}_{4nj} \\ \hat{\mathbf{f}}_{3nj} - \hat{\mathbf{f}}_{4nj} \end{bmatrix}$$

$$= \begin{bmatrix} (-\mathbf{f}_{6(n-1)(j-1)} + \mathbf{f}_{7(n-1)(j-1)} - \mathbf{f}_{9(n-1)j} - \mathbf{f}_{2nj} + \mathbf{f}_{3nj} + \mathbf{w}_{1nj}) + (-\mathbf{f}_{1nj} - \mathbf{f}_{4nj} + \mathbf{f}_{5nj} - \mathbf{f}_{8nj} + \mathbf{f}_{9nj} + \mathbf{w}_{2nj}) \\ (-\mathbf{f}_{6(n-1)(j-1)} + \mathbf{f}_{7(n-1)(j-1)} - \mathbf{f}_{9(n-1)j} - \mathbf{f}_{2nj} + \mathbf{f}_{3nj} + \mathbf{w}_{1nj}) - (-\mathbf{f}_{1nj} - \mathbf{f}_{4nj} + \mathbf{f}_{5nj} - \mathbf{f}_{8nj} + \mathbf{f}_{9nj} + \mathbf{w}_{2nj}) \\ (-\mathbf{f}_{7nj} + \mathbf{f}_{8nj} + \mathbf{f}_{10nj} - \mathbf{f}_{31j} + \mathbf{f}_{41j} + \mathbf{w}_{3nj}) + (-\mathbf{f}_{5nj} + \mathbf{f}_{6nj} - \mathbf{f}_{10(n-1)j} + \mathbf{f}_{1n(j+1)} + \mathbf{f}_{2n(j+1)} + \mathbf{w}_{4nj}) \\ (-\mathbf{f}_{7nj} + \mathbf{f}_{8nj} + \mathbf{f}_{10nj} - \mathbf{f}_{31j} + \mathbf{f}_{41j} + \mathbf{w}_{3nj}) - (-\mathbf{f}_{5nj} + \mathbf{f}_{6nj} - \mathbf{f}_{10(n-1)j} + \mathbf{f}_{1n(j+1)} + \mathbf{f}_{2n(j+1)} + \mathbf{w}_{4nj}) \end{bmatrix}$$

$(1 \le i \le n,\ j = m)$

$$\bar{\mathbf{f}}_{1m} = \begin{bmatrix} \hat{\mathbf{f}}_{11m} + \hat{\mathbf{f}}_{21m} \\ \hat{\mathbf{f}}_{11m} - \hat{\mathbf{f}}_{21m} \\ \hat{\mathbf{f}}_{31m} + \hat{\mathbf{f}}_{41m} \\ \hat{\mathbf{f}}_{31m} - \hat{\mathbf{f}}_{41m} \end{bmatrix}$$

$$= \begin{bmatrix} (-\mathbf{f}_{6n(m-1)} + \mathbf{f}_{7n(m-1)} - \mathbf{f}_{21m} + \mathbf{f}_{31m} - \mathbf{f}_{9nm} + \mathbf{w}_{1nm}) + (-\mathbf{f}_{41m} + \mathbf{f}_{51m} - \mathbf{f}_{81m} - \mathbf{f}_{11m} + \mathbf{f}_{91m} + \mathbf{w}_{2nm}) \\ (-\mathbf{f}_{6n(m-1)} + \mathbf{f}_{7n(m-1)} - \mathbf{f}_{21m} + \mathbf{f}_{31m} - \mathbf{f}_{9nm} + \mathbf{w}_{1nm}) - (-\mathbf{f}_{41m} + \mathbf{f}_{51m} - \mathbf{f}_{81m} - \mathbf{f}_{11m} + \mathbf{f}_{91m} + \mathbf{w}_{2nm}) \\ (-\mathbf{f}_{71m} + \mathbf{f}_{81m} - \mathbf{f}_{32m} + \mathbf{f}_{42m} + \mathbf{w}_{31m}) + (-\mathbf{f}_{51m} + \mathbf{f}_{61m} - \mathbf{f}_{6nm} + \mathbf{f}_{7nm} + \mathbf{w}_{41m}) \\ (-\mathbf{f}_{71m} + \mathbf{f}_{81m} - \mathbf{f}_{32m} + \mathbf{f}_{42m} + \mathbf{w}_{31m}) - (-\mathbf{f}_{51m} + \mathbf{f}_{61m} - \mathbf{f}_{6nm} + \mathbf{f}_{7nm} + \mathbf{w}_{41m}) \end{bmatrix}$$

$$\bar{\mathbf{f}}_{im} = \begin{bmatrix} \hat{\mathbf{f}}_{1im} + \hat{\mathbf{f}}_{2im} \\ \hat{\mathbf{f}}_{1im} - \hat{\mathbf{f}}_{2im} \\ \hat{\mathbf{f}}_{3im} + \hat{\mathbf{f}}_{4im} \\ \hat{\mathbf{f}}_{3im} - \hat{\mathbf{f}}_{4im} \end{bmatrix} \quad (18.E.4)$$

$$= \begin{bmatrix} (-\mathbf{f}_{6(i-1)(m-1)} + \mathbf{f}_{7(i-1)(m-1)} - \mathbf{f}_{9(i-1)m} - \mathbf{f}_{2im} + \mathbf{f}_{3im} + \mathbf{w}_{1im}) + (-\mathbf{f}_{1im} - \mathbf{f}_{4im} + \mathbf{f}_{5im} - \mathbf{f}_{8im} + \mathbf{f}_{9im} + \mathbf{w}_{2im}) \\ (-\mathbf{f}_{6(i-1)(m-1)} + \mathbf{f}_{7(i-1)(m-1)} - \mathbf{f}_{9(i-1)m} - \mathbf{f}_{2im} + \mathbf{f}_{3im} + \mathbf{w}_{1im}) - (-\mathbf{f}_{1im} - \mathbf{f}_{4im} + \mathbf{f}_{5im} - \mathbf{f}_{8im} + \mathbf{f}_{9im} + \mathbf{w}_{2im}) \\ (-\mathbf{f}_{7im} + \mathbf{f}_{8im} - \mathbf{f}_{3(i+1)m} + \mathbf{f}_{4(i+1)m} + \mathbf{w}_{3im}) + (-\mathbf{f}_{5im} - \mathbf{f}_{6(i-1)m} + \mathbf{f}_{6im} + \mathbf{f}_{7(i-1)m} + \mathbf{w}_{4im}) \\ (-\mathbf{f}_{7im} + \mathbf{f}_{8im} - \mathbf{f}_{3(i+1)m} + \mathbf{f}_{4(i+1)m} + \mathbf{w}_{3im}) - (-\mathbf{f}_{5im} - \mathbf{f}_{6(i-1)m} + \mathbf{f}_{6im} + \mathbf{f}_{7(i-1)m} + \mathbf{w}_{4im}) \end{bmatrix}$$

$$\bar{\mathbf{f}}_{nm} = \begin{bmatrix} \hat{\mathbf{f}}_{1nm} + \hat{\mathbf{f}}_{2nm} \\ \hat{\mathbf{f}}_{1nm} - \hat{\mathbf{f}}_{2nm} \\ \hat{\mathbf{f}}_{3nm} + \hat{\mathbf{f}}_{4nm} \\ \hat{\mathbf{f}}_{3nm} - \hat{\mathbf{f}}_{4nm} \end{bmatrix}$$

$$= \begin{bmatrix} (-\mathbf{f}_{6(n-1)(m-1)} + \mathbf{f}_{7(n-1)(m-1)} - \mathbf{f}_{9(n-1)m} - \mathbf{f}_{2nm} + \mathbf{f}_{3nm} + \mathbf{w}_{1nm}) + (-\mathbf{f}_{1nm} - \mathbf{f}_{4nm} + \mathbf{f}_{5nm} - \mathbf{f}_{8nm} + \mathbf{f}_{9nm} + \mathbf{w}_{2nm}) \\ (-\mathbf{f}_{6(n-1)(m-1)} + \mathbf{f}_{7(n-1)(m-1)} - \mathbf{f}_{9(n-1)m} - \mathbf{f}_{2nm} + \mathbf{f}_{3nm} + \mathbf{w}_{1nm}) - (-\mathbf{f}_{1nm} - \mathbf{f}_{4nm} + \mathbf{f}_{5nm} - \mathbf{f}_{8nm} + \mathbf{f}_{9nm} + \mathbf{w}_{2nm}) \\ (-\mathbf{f}_{7nm} + \mathbf{f}_{8nm} - \mathbf{f}_{31m} + \mathbf{f}_{41m} + \mathbf{w}_{3nm}) + (-\mathbf{f}_{5nm} + \mathbf{f}_{6nm} - \mathbf{f}_{6(n-1)m} + \mathbf{f}_{7(n-1)m} + \mathbf{w}_{4nm}) \\ (-\mathbf{f}_{7nm} + \mathbf{f}_{8nm} - \mathbf{f}_{31m} + \mathbf{f}_{41m} + \mathbf{w}_{3nm}) - (-\mathbf{f}_{5nm} + \mathbf{f}_{6nm} - \mathbf{f}_{6(n-1)m} + \mathbf{f}_{7(n-1)m} + \mathbf{w}_{4nm}) \end{bmatrix}$$

© 2002 by CRC Press LLC

$$\mathbf{f}_{ij}^{o} = \begin{bmatrix} \mathbf{f}_5 \\ \mathbf{f}_1 \end{bmatrix}_{ij}, \mathbf{f}_{ij}^{d} = \begin{bmatrix} \mathbf{f}_2 \\ \mathbf{f}_3 \\ \mathbf{f}_4 \\ \mathbf{f}_6 \\ \mathbf{f}_7 \\ \mathbf{f}_8 \\ \mathbf{f}_9 \\ \mathbf{f}_{10} \end{bmatrix}_{ij}, \ \mathbf{w}_{ij} = \begin{bmatrix} \mathbf{w}_1 \\ \mathbf{w}_2 \\ \mathbf{w}_3 \\ \mathbf{w}_4 \end{bmatrix}_{ij}$$

$$\bar{\mathbf{f}}_{11} = \begin{bmatrix} \mathbf{I}_3 & \mathbf{0} & \mathbf{0} & \mathbf{0} & \mathbf{0} & \mathbf{0} & \mathbf{0} & \mathbf{0} \\ \mathbf{I}_3 & \mathbf{0} & \mathbf{0} & \mathbf{0} & \mathbf{0} & \mathbf{0} & \mathbf{0} & \mathbf{0} \\ \mathbf{0} & \mathbf{0} & \mathbf{0} & \mathbf{0} & \mathbf{0} & \mathbf{0} & \mathbf{0} & \mathbf{0} \\ \mathbf{0} & \mathbf{0} & \mathbf{0} & \mathbf{0} & \mathbf{0} & \mathbf{0} & \mathbf{0} & \mathbf{0} \end{bmatrix} \mathbf{f}_{n1}^{d} + \begin{bmatrix} -\mathbf{I}_3 & \mathbf{I}_3 & -\mathbf{I}_3 & \mathbf{0} & \mathbf{0} & -\mathbf{I}_3 & \mathbf{0} & \mathbf{0} \\ -\mathbf{I}_3 & \mathbf{I}_3 & \mathbf{I}_3 & \mathbf{0} & \mathbf{0} & \mathbf{I}_3 & \mathbf{0} & \mathbf{0} \\ \mathbf{0} & \mathbf{0} & \mathbf{0} & \mathbf{I}_3 & -\mathbf{I}_3 & \mathbf{I}_3 & \mathbf{0} & \mathbf{I}_3 \\ \mathbf{0} & \mathbf{0} & \mathbf{0} & -\mathbf{I}_3 & -\mathbf{I}_3 & \mathbf{I}_3 & \mathbf{0} & \mathbf{I}_3 \end{bmatrix} \mathbf{f}_{11}^{d}$$

$$+ \begin{bmatrix} \mathbf{0} & \mathbf{0} & \mathbf{0} & \mathbf{0} & \mathbf{0} & \mathbf{0} & \mathbf{0} & \mathbf{0} \\ \mathbf{0} & \mathbf{0} & \mathbf{0} & \mathbf{0} & \mathbf{0} & \mathbf{0} & \mathbf{0} & \mathbf{0} \\ \mathbf{I}_3 & \mathbf{0} & \mathbf{0} & \mathbf{0} & \mathbf{0} & \mathbf{0} & \mathbf{0} & \mathbf{0} \\ -\mathbf{I}_3 & \mathbf{0} & \mathbf{0} & \mathbf{0} & \mathbf{0} & \mathbf{0} & \mathbf{0} & \mathbf{0} \end{bmatrix} \mathbf{f}_{12}^{d} + \begin{bmatrix} \mathbf{0} & \mathbf{0} & \mathbf{0} & \mathbf{0} & \mathbf{0} & \mathbf{0} & \mathbf{0} & \mathbf{0} \\ \mathbf{0} & \mathbf{0} & \mathbf{0} & \mathbf{0} & \mathbf{0} & \mathbf{0} & \mathbf{0} & \mathbf{0} \\ \mathbf{0} & -\mathbf{I}_3 & \mathbf{I}_3 & \mathbf{0} & \mathbf{0} & \mathbf{0} & \mathbf{0} & \mathbf{0} \\ \mathbf{0} & -\mathbf{I}_3 & \mathbf{I}_3 & \mathbf{0} & \mathbf{0} & \mathbf{0} & \mathbf{0} & \mathbf{0} \end{bmatrix} \mathbf{f}_{21}^{d}$$

$$+ \begin{bmatrix} \mathbf{I}_3 & -\mathbf{I}_3 \\ -\mathbf{I}_3 & \mathbf{I}_3 \\ -\mathbf{I}_3 & \mathbf{0} \\ \mathbf{I}_3 & \mathbf{0} \end{bmatrix} \mathbf{f}_{11}^{o} + \begin{bmatrix} \mathbf{0} & \mathbf{0} \\ \mathbf{0} & \mathbf{0} \\ \mathbf{0} & \mathbf{I}_3 \\ \mathbf{0} & -\mathbf{I}_3 \end{bmatrix} \mathbf{f}_{12}^{o} + \begin{bmatrix} \mathbf{I}_3 \\ \mathbf{I}_3 \\ \mathbf{0} \\ \mathbf{0} \end{bmatrix} \mathbf{f}_{1n1} + \begin{bmatrix} \mathbf{I}_3 & \mathbf{I}_3 & \mathbf{0} & \mathbf{0} \\ \mathbf{I}_3 & -\mathbf{I}_3 & \mathbf{0} & \mathbf{0} \\ \mathbf{0} & \mathbf{0} & \mathbf{I}_3 & \mathbf{I}_3 \\ \mathbf{0} & \mathbf{0} & \mathbf{I}_3 & -\mathbf{I}_3 \end{bmatrix} \mathbf{w}_{11}.$$

Or, in matrix notation, with the implied matrix definitions,

$$\bar{\mathbf{f}}_{11} = \mathbf{B}_{n1}^{d}\mathbf{f}_{n1}^{d} + \mathbf{B}_{11}^{d}\mathbf{f}_{11}^{d} + \mathbf{B}_{12}^{d}\mathbf{f}_{12}^{d} + \mathbf{B}_{21}^{d}\mathbf{f}_{21}^{d} + \mathbf{B}_{11}^{o}\mathbf{f}_{11}^{o} + \mathbf{B}_{12}^{o}\mathbf{f}_{12}^{o} + \mathbf{B}_{1n1}\mathbf{f}_{1n1} + \mathbf{W}\mathbf{w}_{11}. \tag{18.E.5}$$

$$\bar{\mathbf{f}}_{i1} = \begin{bmatrix} \mathbf{I}_3 & \mathbf{0} & \mathbf{0} & \mathbf{0} & \mathbf{0} & \mathbf{0} & \mathbf{0} & \mathbf{0} \\ \mathbf{I}_3 & \mathbf{0} & \mathbf{0} & \mathbf{0} & \mathbf{0} & \mathbf{0} & \mathbf{0} & \mathbf{0} \\ \mathbf{0} & \mathbf{0} & \mathbf{0} & \mathbf{0} & \mathbf{0} & \mathbf{0} & \mathbf{0} & \mathbf{I}_3 \\ \mathbf{0} & \mathbf{0} & \mathbf{0} & \mathbf{0} & \mathbf{0} & \mathbf{0} & \mathbf{0} & \mathbf{I}_3 \end{bmatrix} \mathbf{f}_{(i-1)1}^{d} + \begin{bmatrix} -\mathbf{I}_3 & \mathbf{I}_3 & -\mathbf{I}_3 & \mathbf{0} & \mathbf{0} & -\mathbf{I}_3 & \mathbf{0} & \mathbf{0} \\ -\mathbf{I}_3 & \mathbf{I}_3 & \mathbf{I}_3 & \mathbf{0} & \mathbf{0} & \mathbf{I}_3 & \mathbf{0} & \mathbf{0} \\ \mathbf{0} & \mathbf{0} & \mathbf{0} & \mathbf{I}_3 & -\mathbf{I}_3 & \mathbf{I}_3 & \mathbf{0} & \mathbf{I}_3 \\ \mathbf{0} & \mathbf{0} & \mathbf{0} & -\mathbf{I}_3 & -\mathbf{I}_3 & \mathbf{I}_3 & \mathbf{0} & \mathbf{I}_3 \end{bmatrix} \mathbf{f}_{i1}^{d}$$

$$+ \begin{bmatrix} \mathbf{0} & \mathbf{0} & \mathbf{0} & \mathbf{0} & \mathbf{0} & \mathbf{0} & \mathbf{0} & \mathbf{0} \\ \mathbf{0} & \mathbf{0} & \mathbf{0} & \mathbf{0} & \mathbf{0} & \mathbf{0} & \mathbf{0} & \mathbf{0} \\ \mathbf{I}_3 & \mathbf{0} & \mathbf{0} & \mathbf{0} & \mathbf{0} & \mathbf{0} & \mathbf{0} & \mathbf{0} \\ -\mathbf{I}_3 & \mathbf{0} & \mathbf{0} & \mathbf{0} & \mathbf{0} & \mathbf{0} & \mathbf{0} & \mathbf{0} \end{bmatrix} \mathbf{f}_{i2}^{d} + \begin{bmatrix} \mathbf{0} & \mathbf{0} & \mathbf{0} & \mathbf{0} & \mathbf{0} & \mathbf{0} & \mathbf{0} & \mathbf{0} \\ \mathbf{0} & \mathbf{0} & \mathbf{0} & \mathbf{0} & \mathbf{0} & \mathbf{0} & \mathbf{0} & \mathbf{0} \\ \mathbf{0} & -\mathbf{I}_3 & \mathbf{I}_3 & \mathbf{0} & \mathbf{0} & \mathbf{0} & \mathbf{0} & \mathbf{0} \\ \mathbf{0} & -\mathbf{I}_3 & \mathbf{I}_3 & \mathbf{0} & \mathbf{0} & \mathbf{0} & \mathbf{0} & \mathbf{0} \end{bmatrix} \mathbf{f}_{(i+1)1}^{d}$$

$$+ \begin{bmatrix} \mathbf{0} & \mathbf{I}_3 \\ \mathbf{0} & \mathbf{I}_3 \\ \mathbf{0} & \mathbf{0} \\ \mathbf{0} & \mathbf{0} \end{bmatrix} \mathbf{f}_{(i-1)1}^{o} + \begin{bmatrix} \mathbf{I}_3 & -\mathbf{I}_3 \\ -\mathbf{I}_3 & \mathbf{I}_3 \\ -\mathbf{I}_3 & \mathbf{0} \\ \mathbf{I}_3 & \mathbf{0} \end{bmatrix} \mathbf{f}_{i1}^{o} + \begin{bmatrix} \mathbf{0} & \mathbf{0} \\ \mathbf{0} & \mathbf{0} \\ \mathbf{0} & \mathbf{I}_3 \\ \mathbf{0} & -\mathbf{I}_3 \end{bmatrix} \mathbf{f}_{i2}^{o} + \begin{bmatrix} \mathbf{I}_3 & \mathbf{I}_3 & \mathbf{0} & \mathbf{0} \\ \mathbf{I}_3 & -\mathbf{I}_3 & \mathbf{0} & \mathbf{0} \\ \mathbf{0} & \mathbf{0} & \mathbf{I}_3 & \mathbf{I}_3 \\ \mathbf{0} & \mathbf{0} & \mathbf{I}_3 & -\mathbf{I}_3 \end{bmatrix} \mathbf{w}_{i1}$$

© 2002 by CRC Press LLC

Or, in matrix form,

$$\begin{aligned}\bar{\mathbf{f}}_{i1} &= \mathbf{B}_{01}^{d}\mathbf{f}_{(i-1)1}^{d} + \mathbf{B}_{11}^{d}\mathbf{f}_{i1}^{d} + \mathbf{B}_{12}^{d}\mathbf{f}_{i2}^{d} + \mathbf{B}_{21}^{d}\mathbf{f}_{(i+1)1}^{d} + \mathbf{B}_{01}^{o}\mathbf{f}_{(i-1)1}^{o} \\ &\quad + \mathbf{B}_{11}^{o}\mathbf{f}_{i1}^{o} + \mathbf{B}_{12}^{o}\mathbf{f}_{i2}^{o} + \mathbf{W}\mathbf{w}_{i1}.\end{aligned} \tag{18.E.6}$$

$$\begin{aligned}\bar{\mathbf{f}}_{n1} = &\begin{bmatrix} \mathbf{I}_3 & \mathbf{0} & \mathbf{0} & \mathbf{0} & \mathbf{0} & \mathbf{0} & \mathbf{0} & \mathbf{0} \\ \mathbf{I}_3 & \mathbf{0} & \mathbf{0} & \mathbf{0} & \mathbf{0} & \mathbf{0} & \mathbf{0} & \mathbf{0} \\ \mathbf{0} & \mathbf{0} & \mathbf{0} & \mathbf{0} & \mathbf{0} & \mathbf{0} & \mathbf{0} & \mathbf{I}_3 \\ \mathbf{0} & \mathbf{0} & \mathbf{0} & \mathbf{0} & \mathbf{0} & \mathbf{0} & \mathbf{0} & \mathbf{I}_3 \end{bmatrix}\mathbf{f}_{(n-1)1}^{d} + \begin{bmatrix} -\mathbf{I}_3 & \mathbf{I}_3 & -\mathbf{I}_3 & \mathbf{0} & \mathbf{0} & -\mathbf{I}_3 & \mathbf{0} & \mathbf{0} \\ -\mathbf{I}_3 & \mathbf{I}_3 & \mathbf{I}_3 & \mathbf{0} & \mathbf{0} & \mathbf{I}_3 & \mathbf{0} & \mathbf{0} \\ \mathbf{0} & \mathbf{0} & \mathbf{0} & \mathbf{I}_3 & -\mathbf{I}_3 & \mathbf{I}_3 & \mathbf{0} & \mathbf{I}_3 \\ \mathbf{0} & \mathbf{0} & \mathbf{0} & -\mathbf{I}_3 & -\mathbf{I}_3 & \mathbf{I}_3 & \mathbf{0} & \mathbf{I}_3 \end{bmatrix}\mathbf{f}_{n1}^{d} \\ &+ \begin{bmatrix} \mathbf{0} & \mathbf{0} & \mathbf{0} & \mathbf{0} & \mathbf{0} & \mathbf{0} & \mathbf{0} & \mathbf{0} \\ \mathbf{0} & \mathbf{0} & \mathbf{0} & \mathbf{0} & \mathbf{0} & \mathbf{0} & \mathbf{0} & \mathbf{0} \\ \mathbf{I}_3 & \mathbf{0} & \mathbf{0} & \mathbf{0} & \mathbf{0} & \mathbf{0} & \mathbf{0} & \mathbf{0} \\ -\mathbf{I}_3 & \mathbf{0} & \mathbf{0} & \mathbf{0} & \mathbf{0} & \mathbf{0} & \mathbf{0} & \mathbf{0} \end{bmatrix}\mathbf{f}_{n2}^{d} + \begin{bmatrix} \mathbf{0} & \mathbf{0} & \mathbf{0} & \mathbf{0} & \mathbf{0} & \mathbf{0} & \mathbf{0} & \mathbf{0} \\ \mathbf{0} & \mathbf{0} & \mathbf{0} & \mathbf{0} & \mathbf{0} & \mathbf{0} & \mathbf{0} & \mathbf{0} \\ \mathbf{0} & -\mathbf{I}_3 & \mathbf{I}_3 & \mathbf{0} & \mathbf{0} & \mathbf{0} & \mathbf{0} & \mathbf{0} \\ \mathbf{0} & -\mathbf{I}_3 & \mathbf{I}_3 & \mathbf{0} & \mathbf{0} & \mathbf{0} & \mathbf{0} & \mathbf{0} \end{bmatrix}\mathbf{f}_{11}^{d} \\ &+ \begin{bmatrix} \mathbf{0} & \mathbf{I}_3 \\ \mathbf{0} & \mathbf{I}_3 \\ \mathbf{0} & \mathbf{0} \\ \mathbf{0} & \mathbf{0} \end{bmatrix}\mathbf{f}_{(n-1)1}^{o} + \begin{bmatrix} \mathbf{I}_3 & \mathbf{0} \\ -\mathbf{I}_3 & \mathbf{0} \\ -\mathbf{I}_3 & \mathbf{0} \\ \mathbf{I}_3 & \mathbf{0} \end{bmatrix}\mathbf{f}_{n1}^{o} + \begin{bmatrix} \mathbf{0} & \mathbf{0} \\ \mathbf{0} & \mathbf{0} \\ \mathbf{0} & \mathbf{I}_3 \\ \mathbf{0} & -\mathbf{I}_3 \end{bmatrix}\mathbf{f}_{n2}^{o} + \begin{bmatrix} -\mathbf{I}_3 \\ \mathbf{I}_3 \\ \mathbf{0} \\ \mathbf{0} \end{bmatrix}\mathbf{f}_{1n1} \\ &+ \begin{bmatrix} \mathbf{I}_3 & \mathbf{I}_3 & \mathbf{0} & \mathbf{0} \\ \mathbf{I}_3 & -\mathbf{I}_3 & \mathbf{0} & \mathbf{0} \\ \mathbf{0} & \mathbf{0} & \mathbf{I}_3 & \mathbf{I}_3 \\ \mathbf{0} & \mathbf{0} & \mathbf{I}_3 & -\mathbf{I}_3 \end{bmatrix}\mathbf{w}_{n1}.\end{aligned}$$

Or, in matrix form,

$$\begin{aligned}\bar{\mathbf{f}}_{n1} &= \mathbf{B}_{01}^{d}\mathbf{f}_{(n-1)1}^{d} + \mathbf{B}_{11}^{d}\mathbf{f}_{n1}^{d} + \mathbf{B}_{12}^{d}\mathbf{f}_{n2}^{d} + \mathbf{B}_{21}^{d}\mathbf{f}_{11}^{d} + \mathbf{B}_{01}^{o}\mathbf{f}_{(n-1)1}^{o} \\ &\quad + \mathbf{B}_{n1}^{o}\mathbf{f}_{n1}^{o} + \mathbf{B}_{12}^{o}\mathbf{f}_{n2}^{o} + \bar{\mathbf{B}}_{1n1}\mathbf{f}_{1n1} + \mathbf{W}\mathbf{w}_{n1}.\end{aligned} \tag{18.E.7}$$

$$\begin{aligned}\bar{\mathbf{f}}_{12} = &\begin{bmatrix} -\mathbf{I}_3 & \mathbf{I}_3 & -\mathbf{I}_3 & \mathbf{0} & \mathbf{0} & -\mathbf{I}_3 & \mathbf{I}_3 & \mathbf{0} \\ -\mathbf{I}_3 & \mathbf{I}_3 & \mathbf{I}_3 & \mathbf{0} & \mathbf{0} & \mathbf{I}_3 & -\mathbf{I}_3 & \mathbf{0} \\ \mathbf{0} & \mathbf{0} & \mathbf{0} & \mathbf{I}_3 & -\mathbf{I}_3 & \mathbf{I}_3 & \mathbf{0} & \mathbf{I}_3 \\ \mathbf{0} & \mathbf{0} & \mathbf{0} & -\mathbf{I}_3 & -\mathbf{I}_3 & \mathbf{I}_3 & \mathbf{0} & \mathbf{I}_3 \end{bmatrix}\mathbf{f}_{12}^{d} + \begin{bmatrix} \mathbf{0} & \mathbf{0} & \mathbf{0} & \mathbf{0} & \mathbf{0} & \mathbf{0} & \mathbf{0} & \mathbf{0} \\ \mathbf{0} & \mathbf{0} & \mathbf{0} & \mathbf{0} & \mathbf{0} & \mathbf{0} & \mathbf{0} & \mathbf{0} \\ \mathbf{0} & -\mathbf{I}_3 & \mathbf{I}_3 & \mathbf{0} & \mathbf{0} & \mathbf{0} & \mathbf{0} & \mathbf{0} \\ \mathbf{0} & -\mathbf{I}_3 & \mathbf{I}_3 & \mathbf{0} & \mathbf{0} & \mathbf{0} & \mathbf{0} & \mathbf{0} \end{bmatrix}\mathbf{f}_{22}^{d} \\ &+ \begin{bmatrix} \mathbf{0} & \mathbf{0} & \mathbf{0} & \mathbf{0} & \mathbf{0} & \mathbf{0} & \mathbf{0} & \mathbf{0} \\ \mathbf{0} & \mathbf{0} & \mathbf{0} & \mathbf{0} & \mathbf{0} & \mathbf{0} & \mathbf{0} & \mathbf{0} \\ \mathbf{I}_3 & \mathbf{0} & \mathbf{0} & \mathbf{0} & \mathbf{0} & \mathbf{0} & \mathbf{0} & \mathbf{0} \\ -\mathbf{I}_3 & \mathbf{0} & \mathbf{0} & \mathbf{0} & \mathbf{0} & \mathbf{0} & \mathbf{0} & \mathbf{0} \end{bmatrix}\mathbf{f}_{13}^{d} + \begin{bmatrix} \mathbf{0} & \mathbf{0} & \mathbf{0} & -\mathbf{I}_3 & \mathbf{I}_3 & \mathbf{0} & \mathbf{0} & \mathbf{0} \\ \mathbf{0} & \mathbf{0} & \mathbf{0} & -\mathbf{I}_3 & \mathbf{I}_3 & \mathbf{0} & \mathbf{0} & \mathbf{0} \\ \mathbf{0} & \mathbf{0} & \mathbf{0} & \mathbf{0} & \mathbf{0} & \mathbf{0} & \mathbf{0} & \mathbf{0} \\ \mathbf{0} & \mathbf{0} & \mathbf{0} & \mathbf{0} & \mathbf{0} & \mathbf{0} & \mathbf{0} & \mathbf{0} \end{bmatrix}\mathbf{f}_{n1}^{d}\end{aligned}$$

© 2002 by CRC Press LLC

$$+\begin{bmatrix} \mathbf{0} & \mathbf{0} & \mathbf{0} & \mathbf{0} & \mathbf{0} & \mathbf{0} & -\mathbf{I}_3 & \mathbf{0} \\ \mathbf{0} & \mathbf{0} & \mathbf{0} & \mathbf{0} & \mathbf{0} & \mathbf{0} & -\mathbf{I}_3 & \mathbf{0} \\ \mathbf{0} & \mathbf{0} & \mathbf{0} & \mathbf{0} & \mathbf{0} & \mathbf{0} & \mathbf{0} & -\mathbf{I}_3 \\ \mathbf{0} & \mathbf{0} & \mathbf{0} & \mathbf{0} & \mathbf{0} & \mathbf{0} & \mathbf{0} & \mathbf{I}_3 \end{bmatrix} \mathbf{f}_{n2}^d + \begin{bmatrix} \mathbf{I}_3 & -\mathbf{I}_3 \\ -\mathbf{I}_3 & \mathbf{I}_3 \\ -\mathbf{I}_3 & \mathbf{0} \\ \mathbf{I}_3 & \mathbf{0} \end{bmatrix} \mathbf{f}_{12}^o + \begin{bmatrix} \mathbf{0} & \mathbf{0} \\ \mathbf{0} & \mathbf{0} \\ \mathbf{0} & \mathbf{I}_3 \\ \mathbf{0} & -\mathbf{I}_3 \end{bmatrix} \mathbf{f}_{13}^o$$

$$+\begin{bmatrix} \mathbf{I}_3 & \mathbf{I}_3 & \mathbf{0} & \mathbf{0} \\ \mathbf{I}_3 & -\mathbf{I}_3 & \mathbf{0} & \mathbf{0} \\ \mathbf{0} & \mathbf{0} & \mathbf{I}_3 & \mathbf{I}_3 \\ \mathbf{0} & \mathbf{0} & \mathbf{I}_3 & -\mathbf{I}_3 \end{bmatrix} \mathbf{w}_{12}.$$

Or, in matrix form,

$$\begin{aligned} \bar{\mathbf{f}}_{12} = {} & \overline{\mathbf{B}}_{12}^d \mathbf{f}_{12}^d + \mathbf{B}_{21}^d \mathbf{f}_{22}^d + \mathbf{B}_{12}^d \mathbf{f}_{13}^d + \overline{\mathbf{B}}_{n1}^d \mathbf{f}_{n1}^d + \mathbf{B}_{n2}^d \mathbf{f}_{n2}^d \\ & + \mathbf{B}_{11}^o \mathbf{f}_{12}^o + \mathbf{B}_{12}^o \mathbf{f}_{13}^o + \mathbf{W}\mathbf{w}_{12}. \end{aligned} \tag{18.E.8}$$

$$\bar{\mathbf{f}}_{i2} = \begin{bmatrix} \mathbf{0} & \mathbf{0} & \mathbf{0} & -\mathbf{I}_3 & \mathbf{I}_3 & \mathbf{0} & \mathbf{0} & \mathbf{0} \\ \mathbf{0} & \mathbf{0} & \mathbf{0} & -\mathbf{I}_3 & \mathbf{I}_3 & \mathbf{0} & \mathbf{0} & \mathbf{0} \\ \mathbf{0} & \mathbf{0} & \mathbf{0} & \mathbf{0} & \mathbf{0} & \mathbf{0} & \mathbf{0} & \mathbf{0} \\ \mathbf{0} & \mathbf{0} & \mathbf{0} & \mathbf{0} & \mathbf{0} & \mathbf{0} & \mathbf{0} & \mathbf{0} \end{bmatrix} \mathbf{f}_{(i-1)1}^d + \begin{bmatrix} -\mathbf{I}_3 & \mathbf{I}_3 & -\mathbf{I}_3 & \mathbf{0} & \mathbf{0} & -\mathbf{I}_3 & \mathbf{I}_3 & \mathbf{0} \\ -\mathbf{I}_3 & \mathbf{I}_3 & \mathbf{I}_3 & \mathbf{0} & \mathbf{0} & \mathbf{I}_3 & -\mathbf{I}_3 & \mathbf{0} \\ \mathbf{0} & \mathbf{0} & \mathbf{0} & \mathbf{I}_3 & -\mathbf{I}_3 & \mathbf{I}_3 & \mathbf{0} & \mathbf{I}_3 \\ \mathbf{0} & \mathbf{0} & \mathbf{0} & -\mathbf{I}_3 & -\mathbf{I}_3 & \mathbf{I}_3 & \mathbf{0} & \mathbf{I}_3 \end{bmatrix} \mathbf{f}_{i2}^d$$

$$+\begin{bmatrix} \mathbf{0} & \mathbf{0} & \mathbf{0} & \mathbf{0} & \mathbf{0} & \mathbf{0} & \mathbf{0} & \mathbf{0} \\ \mathbf{0} & \mathbf{0} & \mathbf{0} & \mathbf{0} & \mathbf{0} & \mathbf{0} & \mathbf{0} & \mathbf{0} \\ \mathbf{I}_3 & \mathbf{0} & \mathbf{0} & \mathbf{0} & \mathbf{0} & \mathbf{0} & \mathbf{0} & \mathbf{0} \\ -\mathbf{I}_3 & \mathbf{0} & \mathbf{0} & \mathbf{0} & \mathbf{0} & \mathbf{0} & \mathbf{0} & \mathbf{0} \end{bmatrix} \mathbf{f}_{i3}^d + \begin{bmatrix} \mathbf{0} & \mathbf{0} & \mathbf{0} & \mathbf{0} & \mathbf{0} & \mathbf{0} & -\mathbf{I}_3 & \mathbf{0} \\ \mathbf{0} & \mathbf{0} & \mathbf{0} & \mathbf{0} & \mathbf{0} & \mathbf{0} & -\mathbf{I}_3 & \mathbf{0} \\ \mathbf{0} & \mathbf{0} & \mathbf{0} & \mathbf{0} & \mathbf{0} & \mathbf{0} & \mathbf{0} & -\mathbf{I}_3 \\ \mathbf{0} & \mathbf{0} & \mathbf{0} & \mathbf{0} & \mathbf{0} & \mathbf{0} & \mathbf{0} & \mathbf{I}_3 \end{bmatrix} \mathbf{f}_{(i-1)2}^d$$

$$+\begin{bmatrix} \mathbf{0} & \mathbf{0} & \mathbf{0} & \mathbf{0} & \mathbf{0} & \mathbf{0} & \mathbf{0} & \mathbf{0} \\ \mathbf{0} & \mathbf{0} & \mathbf{0} & \mathbf{0} & \mathbf{0} & \mathbf{0} & \mathbf{0} & \mathbf{0} \\ \mathbf{0} & -\mathbf{I}_3 & \mathbf{I}_3 & \mathbf{0} & \mathbf{0} & \mathbf{0} & \mathbf{0} & \mathbf{0} \\ \mathbf{0} & -\mathbf{I}_3 & \mathbf{I}_3 & \mathbf{0} & \mathbf{0} & \mathbf{0} & \mathbf{0} & \mathbf{0} \end{bmatrix} \mathbf{f}_{(i+1)2}^d + \begin{bmatrix} \mathbf{I}_3 & -\mathbf{I}_3 \\ -\mathbf{I}_3 & \mathbf{I}_3 \\ -\mathbf{I}_3 & \mathbf{0} \\ \mathbf{I}_3 & \mathbf{0} \end{bmatrix} \mathbf{f}_{i2}^o$$

$$+\begin{bmatrix} \mathbf{0} & \mathbf{0} \\ \mathbf{0} & \mathbf{0} \\ \mathbf{0} & \mathbf{I}_3 \\ \mathbf{0} & -\mathbf{I}_3 \end{bmatrix} \mathbf{f}_{i3}^o + \begin{bmatrix} \mathbf{I}_3 & \mathbf{I}_3 & \mathbf{0} & \mathbf{0} \\ \mathbf{I}_3 & -\mathbf{I}_3 & \mathbf{0} & \mathbf{0} \\ \mathbf{0} & \mathbf{0} & \mathbf{I}_3 & \mathbf{I}_3 \\ \mathbf{0} & \mathbf{0} & \mathbf{I}_3 & -\mathbf{I}_3 \end{bmatrix} \mathbf{w}_{i2}.$$

Or, in matrix form,

$$\begin{aligned} \bar{\mathbf{f}}_{i2} = {} & \overline{\mathbf{B}}_{n1}^d \mathbf{f}_{(i-1)1}^d + \overline{\mathbf{B}}_{12}^d \mathbf{f}_{i2}^d + \mathbf{B}_{12}^d \mathbf{f}_{i3}^d + \mathbf{B}_{n2}^d \mathbf{f}_{(i-1)2}^d + \mathbf{B}_{21}^d \mathbf{f}_{(i+1)2}^d \\ & + \mathbf{B}_{11}^o \mathbf{f}_{i2}^o + \mathbf{B}_{12}^o \mathbf{f}_{i3}^o + \mathbf{W}\mathbf{w}_{i2}. \end{aligned} \tag{18.E.9}$$

$$\bar{\mathbf{f}}_{n2} = \begin{bmatrix} \mathbf{0} & \mathbf{0} & \mathbf{0} & \mathbf{0} & \mathbf{0} & \mathbf{0} & \mathbf{0} & \mathbf{0} \\ \mathbf{0} & \mathbf{0} & \mathbf{0} & \mathbf{0} & \mathbf{0} & \mathbf{0} & \mathbf{0} & \mathbf{0} \\ \mathbf{0} & -\mathbf{I}_3 & \mathbf{I}_3 & \mathbf{0} & \mathbf{0} & \mathbf{0} & \mathbf{0} & \mathbf{0} \\ \mathbf{0} & -\mathbf{I}_3 & \mathbf{I}_3 & \mathbf{0} & \mathbf{0} & \mathbf{0} & \mathbf{0} & \mathbf{0} \end{bmatrix} \mathbf{f}_{12}^d + \begin{bmatrix} \mathbf{0} & \mathbf{0} & \mathbf{0} & -\mathbf{I}_3 & \mathbf{I}_3 & \mathbf{0} & \mathbf{0} & \mathbf{0} \\ \mathbf{0} & \mathbf{0} & \mathbf{0} & -\mathbf{I}_3 & \mathbf{I}_3 & \mathbf{0} & \mathbf{0} & \mathbf{0} \\ \mathbf{0} & \mathbf{0} & \mathbf{0} & \mathbf{0} & \mathbf{0} & \mathbf{0} & \mathbf{0} & \mathbf{0} \\ \mathbf{0} & \mathbf{0} & \mathbf{0} & \mathbf{0} & \mathbf{0} & \mathbf{0} & \mathbf{0} & \mathbf{0} \end{bmatrix} \mathbf{f}_{(n-1)1}^d$$

© 2002 by CRC Press LLC

$$+\begin{bmatrix} \mathbf{0} & \mathbf{0} & \mathbf{0} & \mathbf{0} & \mathbf{0} & \mathbf{0} & -\mathbf{I}_3 & \mathbf{0} \\ \mathbf{0} & \mathbf{0} & \mathbf{0} & \mathbf{0} & \mathbf{0} & \mathbf{0} & -\mathbf{I}_3 & \mathbf{0} \\ \mathbf{0} & \mathbf{0} & \mathbf{0} & \mathbf{0} & \mathbf{0} & \mathbf{0} & \mathbf{0} & -\mathbf{I}_3 \\ \mathbf{0} & \mathbf{0} & \mathbf{0} & \mathbf{0} & \mathbf{0} & \mathbf{0} & \mathbf{0} & \mathbf{I}_3 \end{bmatrix} \mathbf{f}^d_{(n-1)2} + \begin{bmatrix} -\mathbf{I}_3 & \mathbf{I}_3 & -\mathbf{I}_3 & \mathbf{0} & \mathbf{0} & -\mathbf{I}_3 & \mathbf{I}_3 & \mathbf{0} \\ -\mathbf{I}_3 & \mathbf{I}_3 & \mathbf{I}_3 & \mathbf{0} & \mathbf{0} & \mathbf{I}_3 & -\mathbf{I}_3 & \mathbf{0} \\ \mathbf{0} & \mathbf{0} & \mathbf{0} & \mathbf{I}_3 & -\mathbf{I}_3 & \mathbf{I}_3 & \mathbf{0} & \mathbf{I}_3 \\ \mathbf{0} & \mathbf{0} & \mathbf{0} & -\mathbf{I}_3 & -\mathbf{I}_3 & \mathbf{I}_3 & \mathbf{0} & \mathbf{I}_3 \end{bmatrix} \mathbf{f}^d_{n2}$$

$$+\begin{bmatrix} \mathbf{0} & \mathbf{0} & \mathbf{0} & \mathbf{0} & \mathbf{0} & \mathbf{0} & \mathbf{0} & \mathbf{0} \\ \mathbf{0} & \mathbf{0} & \mathbf{0} & \mathbf{0} & \mathbf{0} & \mathbf{0} & \mathbf{0} & \mathbf{0} \\ \mathbf{I}_3 & \mathbf{0} & \mathbf{0} & \mathbf{0} & \mathbf{0} & \mathbf{0} & \mathbf{0} & \mathbf{0} \\ -\mathbf{I}_3 & \mathbf{0} & \mathbf{0} & \mathbf{0} & \mathbf{0} & \mathbf{0} & \mathbf{0} & \mathbf{0} \end{bmatrix} \mathbf{f}^d_{n3} + \begin{bmatrix} \mathbf{0} & \mathbf{0} \\ \mathbf{0} & \mathbf{0} \\ \mathbf{0} & \mathbf{I}_3 \\ \mathbf{0} & -\mathbf{I}_3 \end{bmatrix} \mathbf{f}^o_{n3} + \begin{bmatrix} \mathbf{I}_3 & -\mathbf{I}_3 \\ -\mathbf{I}_3 & \mathbf{I}_3 \\ -\mathbf{I}_3 & \mathbf{0} \\ \mathbf{I}_3 & \mathbf{0} \end{bmatrix} \mathbf{f}^o_{n2}$$

$$+\begin{bmatrix} \mathbf{I}_3 & \mathbf{I}_3 & \mathbf{0} & \mathbf{0} \\ \mathbf{I}_3 & -\mathbf{I}_3 & \mathbf{0} & \mathbf{0} \\ \mathbf{0} & \mathbf{0} & \mathbf{I}_3 & \mathbf{I}_3 \\ \mathbf{0} & \mathbf{0} & \mathbf{I}_3 & -\mathbf{I}_3 \end{bmatrix} \mathbf{w}_{n2}.$$

Or, in matrix form,

$$\begin{aligned} \bar{\mathbf{f}}_{n2} = {} & \mathbf{B}^d_{21}\mathbf{f}^d_{12} + \overline{\mathbf{B}}^d_{n1}\mathbf{f}^d_{(n-1)1} + \mathbf{B}^d_{n2}\mathbf{f}^d_{(n-1)2} + \overline{\mathbf{B}}^d_{12}\mathbf{f}^d_{n2} + \mathbf{B}^d_{12}\mathbf{f}^d_{n3} + \mathbf{B}^o_{12}\mathbf{f}^o_{n3} \\ & + \mathbf{B}^o_{11}\mathbf{f}^o_{n2} + \mathbf{W}\mathbf{w}_{n2}. \end{aligned} \tag{18.E.10}$$

$$\bar{\mathbf{f}}_{1j} = \begin{bmatrix} \mathbf{0} & \mathbf{0} & \mathbf{0} & -\mathbf{I}_3 & \mathbf{I}_3 & \mathbf{0} & \mathbf{0} & \mathbf{0} \\ \mathbf{0} & \mathbf{0} & \mathbf{0} & -\mathbf{I}_3 & \mathbf{I}_3 & \mathbf{0} & \mathbf{0} & \mathbf{0} \\ \mathbf{0} & \mathbf{0} & \mathbf{0} & \mathbf{0} & \mathbf{0} & \mathbf{0} & \mathbf{0} & \mathbf{0} \\ \mathbf{0} & \mathbf{0} & \mathbf{0} & \mathbf{0} & \mathbf{0} & \mathbf{0} & \mathbf{0} & \mathbf{0} \end{bmatrix} \mathbf{f}^d_{n(j-1)} + \begin{bmatrix} -\mathbf{I}_3 & \mathbf{I}_3 & -\mathbf{I}_3 & \mathbf{0} & \mathbf{0} & -\mathbf{I}_3 & \mathbf{I}_3 & \mathbf{0} \\ -\mathbf{I}_3 & \mathbf{I}_3 & \mathbf{I}_3 & \mathbf{0} & \mathbf{0} & \mathbf{I}_3 & -\mathbf{I}_3 & \mathbf{0} \\ \mathbf{0} & \mathbf{0} & \mathbf{0} & \mathbf{I}_3 & -\mathbf{I}_3 & \mathbf{I}_3 & \mathbf{0} & \mathbf{I}_3 \\ \mathbf{0} & \mathbf{0} & \mathbf{0} & -\mathbf{I}_3 & -\mathbf{I}_3 & \mathbf{I}_3 & \mathbf{0} & \mathbf{I}_3 \end{bmatrix} \mathbf{f}^d_{1j}$$

$$+\begin{bmatrix} \mathbf{0} & \mathbf{0} & \mathbf{0} & \mathbf{0} & \mathbf{0} & \mathbf{0} & -\mathbf{I}_3 & \mathbf{0} \\ \mathbf{0} & \mathbf{0} & \mathbf{0} & \mathbf{0} & \mathbf{0} & \mathbf{0} & -\mathbf{I}_3 & \mathbf{0} \\ \mathbf{0} & \mathbf{0} & \mathbf{0} & \mathbf{0} & \mathbf{0} & \mathbf{0} & \mathbf{0} & -\mathbf{I}_3 \\ \mathbf{0} & \mathbf{0} & \mathbf{0} & \mathbf{0} & \mathbf{0} & \mathbf{0} & \mathbf{0} & \mathbf{I}_3 \end{bmatrix} \mathbf{f}^d_{nj} + \begin{bmatrix} \mathbf{0} & \mathbf{0} & \mathbf{0} & \mathbf{0} & \mathbf{0} & \mathbf{0} & \mathbf{0} & \mathbf{0} \\ \mathbf{0} & \mathbf{0} & \mathbf{0} & \mathbf{0} & \mathbf{0} & \mathbf{0} & \mathbf{0} & \mathbf{0} \\ \mathbf{0} & -\mathbf{I}_3 & \mathbf{I}_3 & \mathbf{0} & \mathbf{0} & \mathbf{0} & \mathbf{0} & \mathbf{0} \\ \mathbf{0} & -\mathbf{I}_3 & \mathbf{I}_3 & \mathbf{0} & \mathbf{0} & \mathbf{0} & \mathbf{0} & \mathbf{0} \end{bmatrix} \mathbf{f}^d_{2j}$$

$$+\begin{bmatrix} \mathbf{0} & \mathbf{0} & \mathbf{0} & \mathbf{0} & \mathbf{0} & \mathbf{0} & \mathbf{0} & \mathbf{0} \\ \mathbf{0} & \mathbf{0} & \mathbf{0} & \mathbf{0} & \mathbf{0} & \mathbf{0} & \mathbf{0} & \mathbf{0} \\ \mathbf{I}_3 & \mathbf{0} & \mathbf{0} & \mathbf{0} & \mathbf{0} & \mathbf{0} & \mathbf{0} & \mathbf{0} \\ -\mathbf{I}_3 & \mathbf{0} & \mathbf{0} & \mathbf{0} & \mathbf{0} & \mathbf{0} & \mathbf{0} & \mathbf{0} \end{bmatrix} \mathbf{f}^d_{1(j+1)} + \begin{bmatrix} \mathbf{I}_3 & -\mathbf{I}_3 \\ -\mathbf{I}_3 & \mathbf{I}_3 \\ -\mathbf{I}_3 & \mathbf{0} \\ \mathbf{I}_3 & \mathbf{0} \end{bmatrix} \mathbf{f}^o_{1j}$$

$$+\begin{bmatrix} \mathbf{0} & \mathbf{0} \\ \mathbf{0} & \mathbf{0} \\ \mathbf{0} & \mathbf{I}_3 \\ \mathbf{0} & -\mathbf{I}_3 \end{bmatrix} \mathbf{f}^o_{1(j+1)} + \begin{bmatrix} \mathbf{I}_3 & \mathbf{I}_3 & \mathbf{0} & \mathbf{0} \\ \mathbf{I}_3 & -\mathbf{I}_3 & \mathbf{0} & \mathbf{0} \\ \mathbf{0} & \mathbf{0} & \mathbf{I}_3 & \mathbf{I}_3 \\ \mathbf{0} & \mathbf{0} & \mathbf{I}_3 & -\mathbf{I}_3 \end{bmatrix} \mathbf{w}_{1j}.$$

Or, in matrix form,

$$\begin{aligned} \bar{\mathbf{f}}_{1j} = {} & \overline{\mathbf{B}}^d_{n1}\mathbf{f}^d_{n(j-1)} + \overline{\mathbf{B}}^d_{12}\mathbf{f}^d_{1j} + \mathbf{B}^d_{n2}\mathbf{f}^d_{nj} + \mathbf{B}^d_{21}\mathbf{f}^d_{2j} + \mathbf{B}^d_{12}\mathbf{f}^d_{1(j+1)} \\ & + \mathbf{B}^o_{11}\mathbf{f}^o_{1j} + \mathbf{B}^o_{12}\mathbf{f}^o_{1(j+1)} + \mathbf{W}\mathbf{w}_{1j}. \end{aligned} \tag{18.E.11}$$

© 2002 by CRC Press LLC

$$
\bar{\mathbf{f}}_{ij} = \begin{bmatrix} \mathbf{0} & \mathbf{0} & \mathbf{0} & -\mathbf{I}_3 & \mathbf{I}_3 & \mathbf{0} & \mathbf{0} & \mathbf{0} \\ \mathbf{0} & \mathbf{0} & \mathbf{0} & -\mathbf{I}_3 & \mathbf{I}_3 & \mathbf{0} & \mathbf{0} & \mathbf{0} \\ \mathbf{0} & \mathbf{0} & \mathbf{0} & \mathbf{0} & \mathbf{0} & \mathbf{0} & \mathbf{0} & \mathbf{0} \\ \mathbf{0} & \mathbf{0} & \mathbf{0} & \mathbf{0} & \mathbf{0} & \mathbf{0} & \mathbf{0} & \mathbf{0} \end{bmatrix} \mathbf{f}^d_{(i-1)(j-1)} + \begin{bmatrix} -\mathbf{I}_3 & \mathbf{I}_3 & -\mathbf{I}_3 & \mathbf{0} & \mathbf{0} & -\mathbf{I}_3 & \mathbf{I}_3 & \mathbf{0} \\ -\mathbf{I}_3 & \mathbf{I}_3 & \mathbf{I}_3 & \mathbf{0} & \mathbf{0} & \mathbf{I}_3 & -\mathbf{I}_3 & \mathbf{0} \\ \mathbf{0} & \mathbf{0} & \mathbf{0} & \mathbf{I}_3 & -\mathbf{I}_3 & \mathbf{I}_3 & \mathbf{0} & \mathbf{I}_3 \\ \mathbf{0} & \mathbf{0} & \mathbf{0} & -\mathbf{I}_3 & -\mathbf{I}_3 & \mathbf{I}_3 & \mathbf{0} & \mathbf{I}_3 \end{bmatrix} \mathbf{f}^d_{ij}
$$

$$
+ \begin{bmatrix} \mathbf{0} & \mathbf{0} & \mathbf{0} & \mathbf{0} & \mathbf{0} & \mathbf{0} & -\mathbf{I}_3 & \mathbf{0} \\ \mathbf{0} & \mathbf{0} & \mathbf{0} & \mathbf{0} & \mathbf{0} & \mathbf{0} & -\mathbf{I}_3 & \mathbf{0} \\ \mathbf{0} & \mathbf{0} & \mathbf{0} & \mathbf{0} & \mathbf{0} & \mathbf{0} & \mathbf{0} & -\mathbf{I}_3 \\ \mathbf{0} & \mathbf{0} & \mathbf{0} & \mathbf{0} & \mathbf{0} & \mathbf{0} & \mathbf{0} & \mathbf{I}_3 \end{bmatrix} \mathbf{f}^d_{(i-1)j} + \begin{bmatrix} \mathbf{0} & \mathbf{0} & \mathbf{0} & \mathbf{0} & \mathbf{0} & \mathbf{0} & \mathbf{0} & \mathbf{0} \\ \mathbf{0} & \mathbf{0} & \mathbf{0} & \mathbf{0} & \mathbf{0} & \mathbf{0} & \mathbf{0} & \mathbf{0} \\ \mathbf{0} & -\mathbf{I}_3 & \mathbf{I}_3 & \mathbf{0} & \mathbf{0} & \mathbf{0} & \mathbf{0} & \mathbf{0} \\ \mathbf{0} & -\mathbf{I}_3 & \mathbf{I}_3 & \mathbf{0} & \mathbf{0} & \mathbf{0} & \mathbf{0} & \mathbf{0} \end{bmatrix} \mathbf{f}^d_{(i+1)j}
$$

$$
+ \begin{bmatrix} \mathbf{0} & \mathbf{0} & \mathbf{0} & \mathbf{0} & \mathbf{0} & \mathbf{0} & \mathbf{0} & \mathbf{0} \\ \mathbf{0} & \mathbf{0} & \mathbf{0} & \mathbf{0} & \mathbf{0} & \mathbf{0} & \mathbf{0} & \mathbf{0} \\ \mathbf{I}_3 & \mathbf{0} & \mathbf{0} & \mathbf{0} & \mathbf{0} & \mathbf{0} & \mathbf{0} & \mathbf{0} \\ -\mathbf{I}_3 & \mathbf{0} & \mathbf{0} & \mathbf{0} & \mathbf{0} & \mathbf{0} & \mathbf{0} & \mathbf{0} \end{bmatrix} \mathbf{f}^d_{i(j+1)} + \begin{bmatrix} \mathbf{I}_3 & -\mathbf{I}_3 \\ -\mathbf{I}_3 & \mathbf{I}_3 \\ -\mathbf{I}_3 & \mathbf{0} \\ \mathbf{I}_3 & \mathbf{0} \end{bmatrix} \mathbf{f}^o_{ij}
$$

$$
+ \begin{bmatrix} \mathbf{0} & \mathbf{0} \\ \mathbf{0} & \mathbf{0} \\ \mathbf{0} & \mathbf{I}_3 \\ \mathbf{0} & -\mathbf{I}_3 \end{bmatrix} \mathbf{f}^o_{i(j+1)} + \begin{bmatrix} \mathbf{I}_3 & \mathbf{I}_3 & \mathbf{0} & \mathbf{0} \\ \mathbf{I}_3 & -\mathbf{I}_3 & \mathbf{0} & \mathbf{0} \\ \mathbf{0} & \mathbf{0} & \mathbf{I}_3 & \mathbf{I}_3 \\ \mathbf{0} & \mathbf{0} & \mathbf{I}_3 & -\mathbf{I}_3 \end{bmatrix} \mathbf{w}_{ij}.
$$

Or, in matrix form,

$$
\begin{aligned}
\bar{\mathbf{f}}_{ij} = {} & \overline{\mathbf{B}}^d_{n1}\mathbf{f}^d_{(i-1)(j-1)} + \overline{\mathbf{B}}^d_{12}\mathbf{f}^d_{ij} + \mathbf{B}^d_{n2}\mathbf{f}^d_{(i-1)j} + \mathbf{B}^d_{21}\mathbf{f}^d_{(i+1)j} + \mathbf{B}^d_{12}\mathbf{f}^d_{i(j+1)} \\
& + \mathbf{B}^o_{11}\mathbf{f}^o_{ij} + \mathbf{B}^o_{12}\mathbf{f}^o_{i(j+1)} + \mathbf{W}\mathbf{w}_{ij}.
\end{aligned}
\tag{18.E.12}
$$

$$
\bar{\mathbf{f}}_{nj} = \begin{bmatrix} \mathbf{0} & \mathbf{0} & \mathbf{0} & -\mathbf{I}_3 & \mathbf{I}_3 & \mathbf{0} & \mathbf{0} & \mathbf{0} \\ \mathbf{0} & \mathbf{0} & \mathbf{0} & -\mathbf{I}_3 & \mathbf{I}_3 & \mathbf{0} & \mathbf{0} & \mathbf{0} \\ \mathbf{0} & \mathbf{0} & \mathbf{0} & \mathbf{0} & \mathbf{0} & \mathbf{0} & \mathbf{0} & \mathbf{0} \\ \mathbf{0} & \mathbf{0} & \mathbf{0} & \mathbf{0} & \mathbf{0} & \mathbf{0} & \mathbf{0} & \mathbf{0} \end{bmatrix} \mathbf{f}^d_{(n-1)(j-1)} + \begin{bmatrix} -\mathbf{I}_3 & \mathbf{I}_3 & -\mathbf{I}_3 & \mathbf{0} & \mathbf{0} & -\mathbf{I}_3 & \mathbf{I}_3 & \mathbf{0} \\ -\mathbf{I}_3 & \mathbf{I}_3 & \mathbf{I}_3 & \mathbf{0} & \mathbf{0} & \mathbf{I}_3 & -\mathbf{I}_3 & \mathbf{0} \\ \mathbf{0} & \mathbf{0} & \mathbf{0} & \mathbf{I}_3 & -\mathbf{I}_3 & \mathbf{I}_3 & \mathbf{0} & \mathbf{I}_3 \\ \mathbf{0} & \mathbf{0} & \mathbf{0} & -\mathbf{I}_3 & -\mathbf{I}_3 & \mathbf{I}_3 & \mathbf{0} & \mathbf{I}_3 \end{bmatrix} \mathbf{f}^d_{nj}
$$

$$
+ \begin{bmatrix} \mathbf{0} & \mathbf{0} & \mathbf{0} & \mathbf{0} & \mathbf{0} & \mathbf{0} & -\mathbf{I}_3 & \mathbf{0} \\ \mathbf{0} & \mathbf{0} & \mathbf{0} & \mathbf{0} & \mathbf{0} & \mathbf{0} & -\mathbf{I}_3 & \mathbf{0} \\ \mathbf{0} & \mathbf{0} & \mathbf{0} & \mathbf{0} & \mathbf{0} & \mathbf{0} & \mathbf{0} & -\mathbf{I}_3 \\ \mathbf{0} & \mathbf{0} & \mathbf{0} & \mathbf{0} & \mathbf{0} & \mathbf{0} & \mathbf{0} & \mathbf{I}_3 \end{bmatrix} \mathbf{f}^d_{(n-1)j} + \begin{bmatrix} \mathbf{0} & \mathbf{0} & \mathbf{0} & \mathbf{0} & \mathbf{0} & \mathbf{0} & \mathbf{0} & \mathbf{0} \\ \mathbf{0} & \mathbf{0} & \mathbf{0} & \mathbf{0} & \mathbf{0} & \mathbf{0} & \mathbf{0} & \mathbf{0} \\ \mathbf{0} & -\mathbf{I}_3 & \mathbf{I}_3 & \mathbf{0} & \mathbf{0} & \mathbf{0} & \mathbf{0} & \mathbf{0} \\ \mathbf{0} & -\mathbf{I}_3 & \mathbf{I}_3 & \mathbf{0} & \mathbf{0} & \mathbf{0} & \mathbf{0} & \mathbf{0} \end{bmatrix} \mathbf{f}^d_{1j}
$$

$$
+ \begin{bmatrix} \mathbf{0} & \mathbf{0} & \mathbf{0} & \mathbf{0} & \mathbf{0} & \mathbf{0} & \mathbf{0} & \mathbf{0} \\ \mathbf{0} & \mathbf{0} & \mathbf{0} & \mathbf{0} & \mathbf{0} & \mathbf{0} & \mathbf{0} & \mathbf{0} \\ \mathbf{I}_3 & \mathbf{0} & \mathbf{0} & \mathbf{0} & \mathbf{0} & \mathbf{0} & \mathbf{0} & \mathbf{0} \\ -\mathbf{I}_3 & \mathbf{0} & \mathbf{0} & \mathbf{0} & \mathbf{0} & \mathbf{0} & \mathbf{0} & \mathbf{0} \end{bmatrix} \mathbf{f}^d_{n(j+1)} + \begin{bmatrix} \mathbf{I}_3 & -\mathbf{I}_3 \\ -\mathbf{I}_3 & \mathbf{I}_3 \\ -\mathbf{I}_3 & \mathbf{0} \\ \mathbf{I}_3 & \mathbf{0} \end{bmatrix} \mathbf{f}^o_{nj} + \begin{bmatrix} \mathbf{0} & \mathbf{0} \\ \mathbf{0} & \mathbf{0} \\ \mathbf{0} & \mathbf{I}_3 \\ \mathbf{0} & -\mathbf{I}_3 \end{bmatrix} \mathbf{f}^o_{n(j+1)}
$$

$$
+ \begin{bmatrix} \mathbf{I}_3 & \mathbf{I}_3 & \mathbf{0} & \mathbf{0} \\ \mathbf{I}_3 & -\mathbf{I}_3 & \mathbf{0} & \mathbf{0} \\ \mathbf{0} & \mathbf{0} & \mathbf{I}_3 & \mathbf{I}_3 \\ \mathbf{0} & \mathbf{0} & \mathbf{I}_3 & -\mathbf{I}_3 \end{bmatrix} \mathbf{w}_{nj}.
$$

© 2002 by CRC Press LLC

Or, in matrix form,

$$\bar{\mathbf{f}}_{nj} = \overline{\mathbf{B}}^d_{n1}\mathbf{f}^d_{(n-1)(j-1)} + \overline{\mathbf{B}}^d_{12}\mathbf{f}^d_{nj} + \mathbf{B}^d_{n2}\mathbf{f}^d_{(n-1)j} + \mathbf{B}^d_{21}\mathbf{f}^d_{1j} + \mathbf{B}^d_{12}\mathbf{f}^d_{n(j+1)} + \mathbf{B}^o_{11}\mathbf{f}^o_{nj} + \mathbf{B}^o_{12}\mathbf{f}^o_{n(j+1)} + \mathbf{W}\mathbf{w}_{nj}. \tag{18.E.13}$$

$$\bar{\mathbf{f}}_{1m} = \begin{bmatrix} -\mathbf{I}_3 & \mathbf{I}_3 & -\mathbf{I}_3 & \mathbf{0} & \mathbf{0} & -\mathbf{I}_3 & \mathbf{I}_3 & \mathbf{0} \\ -\mathbf{I}_3 & \mathbf{I}_3 & \mathbf{I}_3 & \mathbf{0} & \mathbf{0} & \mathbf{I}_3 & -\mathbf{I}_3 & \mathbf{0} \\ \mathbf{0} & \mathbf{0} & \mathbf{0} & \mathbf{I}_3 & -\mathbf{I}_3 & \mathbf{I}_3 & \mathbf{0} & \mathbf{0} \\ \mathbf{0} & \mathbf{0} & \mathbf{0} & -\mathbf{I}_3 & -\mathbf{I}_3 & \mathbf{I}_3 & \mathbf{0} & \mathbf{0} \end{bmatrix} \mathbf{f}^d_{1m} + \begin{bmatrix} \mathbf{0} & \mathbf{0} & \mathbf{0} & \mathbf{0} & \mathbf{0} & \mathbf{0} & \mathbf{0} & \mathbf{0} \\ \mathbf{0} & \mathbf{0} & \mathbf{0} & \mathbf{0} & \mathbf{0} & \mathbf{0} & \mathbf{0} & \mathbf{0} \\ \mathbf{0} & -\mathbf{I}_3 & \mathbf{I}_3 & \mathbf{0} & \mathbf{0} & \mathbf{0} & \mathbf{0} & \mathbf{0} \\ \mathbf{0} & -\mathbf{I}_3 & \mathbf{I}_3 & \mathbf{0} & \mathbf{0} & \mathbf{0} & \mathbf{0} & \mathbf{0} \end{bmatrix} \mathbf{f}^d_{2m}$$

$$+ \begin{bmatrix} \mathbf{0} & \mathbf{0} & \mathbf{0} & \mathbf{0} & \mathbf{0} & \mathbf{0} & \mathbf{0} & \mathbf{0} \\ \mathbf{0} & \mathbf{0} & \mathbf{0} & \mathbf{0} & \mathbf{0} & \mathbf{0} & \mathbf{0} & \mathbf{0} \\ \mathbf{0} & \mathbf{0} & \mathbf{0} & -\mathbf{I}_3 & \mathbf{I}_3 & \mathbf{0} & \mathbf{0} & \mathbf{0} \\ \mathbf{0} & \mathbf{0} & \mathbf{0} & \mathbf{I}_3 & -\mathbf{I}_3 & \mathbf{0} & \mathbf{0} & \mathbf{0} \end{bmatrix} \mathbf{f}^d_{nm} + \begin{bmatrix} \mathbf{0} & \mathbf{0} & \mathbf{0} & -\mathbf{I}_3 & \mathbf{I}_3 & \mathbf{0} & \mathbf{0} & \mathbf{0} \\ \mathbf{0} & \mathbf{0} & \mathbf{0} & -\mathbf{I}_3 & \mathbf{I}_3 & \mathbf{0} & \mathbf{0} & \mathbf{0} \\ \mathbf{0} & \mathbf{0} & \mathbf{0} & \mathbf{0} & \mathbf{0} & \mathbf{0} & \mathbf{0} & \mathbf{0} \\ \mathbf{0} & \mathbf{0} & \mathbf{0} & \mathbf{0} & \mathbf{0} & \mathbf{0} & \mathbf{0} & \mathbf{0} \end{bmatrix} \mathbf{f}^d_{n(m-1)}$$

$$+ \begin{bmatrix} \mathbf{I}_3 & -\mathbf{I}_3 \\ -\mathbf{I}_3 & \mathbf{I}_3 \\ -\mathbf{I}_3 & \mathbf{0} \\ \mathbf{I}_3 & \mathbf{0} \end{bmatrix} \mathbf{f}^o_{1m} + \begin{bmatrix} \mathbf{I}_3 & \mathbf{I}_3 & \mathbf{0} & \mathbf{0} \\ \mathbf{I}_3 & -\mathbf{I}_3 & \mathbf{0} & \mathbf{0} \\ \mathbf{0} & \mathbf{0} & \mathbf{I}_3 & \mathbf{I}_3 \\ \mathbf{0} & \mathbf{0} & \mathbf{I}_3 & -\mathbf{I}_3 \end{bmatrix} \mathbf{W}_{1m}.$$

Or, in matrix form,

$$\bar{\mathbf{f}}_{1m} = \mathbf{B}^d_{1m}\mathbf{f}^d_{1m} + \mathbf{B}^d_{21}\mathbf{f}^d_{2m} + \mathbf{B}^d_{nm}\mathbf{f}^d_{nm} + \overline{\mathbf{B}}^d_{n1}\mathbf{f}^d_{n(m-1)} + \mathbf{B}^o_{11}\mathbf{f}^o_{1m} + \mathbf{W}\mathbf{w}_{1m}. \tag{18.E.14}$$

$$\bar{\mathbf{f}}_{im} = \begin{bmatrix} \mathbf{0} & \mathbf{0} & \mathbf{0} & -\mathbf{I}_3 & \mathbf{I}_3 & \mathbf{0} & \mathbf{0} & \mathbf{0} \\ \mathbf{0} & \mathbf{0} & \mathbf{0} & -\mathbf{I}_3 & \mathbf{I}_3 & \mathbf{0} & \mathbf{0} & \mathbf{0} \\ \mathbf{0} & \mathbf{0} & \mathbf{0} & \mathbf{0} & \mathbf{0} & \mathbf{0} & \mathbf{0} & \mathbf{0} \\ \mathbf{0} & \mathbf{0} & \mathbf{0} & \mathbf{0} & \mathbf{0} & \mathbf{0} & \mathbf{0} & \mathbf{0} \end{bmatrix} \mathbf{f}^d_{(i-1)(m-1)} + \begin{bmatrix} \mathbf{0} & \mathbf{0} & \mathbf{0} & \mathbf{0} & \mathbf{0} & \mathbf{0} & -\mathbf{I}_3 & \mathbf{0} \\ \mathbf{0} & \mathbf{0} & \mathbf{0} & \mathbf{0} & \mathbf{0} & \mathbf{0} & -\mathbf{I}_3 & \mathbf{0} \\ \mathbf{0} & \mathbf{0} & \mathbf{0} & -\mathbf{I}_3 & \mathbf{I}_3 & \mathbf{0} & \mathbf{0} & \mathbf{0} \\ \mathbf{0} & \mathbf{0} & \mathbf{0} & \mathbf{I}_3 & -\mathbf{I}_3 & \mathbf{0} & \mathbf{0} & \mathbf{0} \end{bmatrix} \mathbf{f}^d_{(i-1)m}$$

$$+ \begin{bmatrix} -\mathbf{I}_3 & \mathbf{I}_3 & -\mathbf{I}_3 & \mathbf{0} & \mathbf{0} & -\mathbf{I}_3 & \mathbf{I}_3 & \mathbf{0} \\ -\mathbf{I}_3 & \mathbf{I}_3 & \mathbf{I}_3 & \mathbf{0} & \mathbf{0} & \mathbf{I}_3 & -\mathbf{I}_3 & \mathbf{0} \\ \mathbf{0} & \mathbf{0} & \mathbf{0} & \mathbf{I}_3 & -\mathbf{I}_3 & \mathbf{I}_3 & \mathbf{0} & \mathbf{0} \\ \mathbf{0} & \mathbf{0} & \mathbf{0} & -\mathbf{I}_3 & -\mathbf{I}_3 & \mathbf{I}_3 & \mathbf{0} & \mathbf{0} \end{bmatrix} \mathbf{f}^d_{1m} + \begin{bmatrix} \mathbf{0} & \mathbf{0} & \mathbf{0} & \mathbf{0} & \mathbf{0} & \mathbf{0} & \mathbf{0} & \mathbf{0} \\ \mathbf{0} & \mathbf{0} & \mathbf{0} & \mathbf{0} & \mathbf{0} & \mathbf{0} & \mathbf{0} & \mathbf{0} \\ \mathbf{0} & -\mathbf{I}_3 & \mathbf{I}_3 & \mathbf{0} & \mathbf{0} & \mathbf{0} & \mathbf{0} & \mathbf{0} \\ \mathbf{0} & -\mathbf{I}_3 & \mathbf{I}_3 & \mathbf{0} & \mathbf{0} & \mathbf{0} & \mathbf{0} & \mathbf{0} \end{bmatrix} \mathbf{f}^d_{(i+1)m}$$

$$+ \begin{bmatrix} \mathbf{I}_3 & -\mathbf{I}_3 \\ -\mathbf{I}_3 & \mathbf{I}_3 \\ -\mathbf{I}_3 & \mathbf{0} \\ \mathbf{I}_3 & \mathbf{0} \end{bmatrix} \mathbf{f}^o_{im} + \begin{bmatrix} \mathbf{I}_3 & \mathbf{I}_3 & \mathbf{0} & \mathbf{0} \\ \mathbf{I}_3 & -\mathbf{I}_3 & \mathbf{0} & \mathbf{0} \\ \mathbf{0} & \mathbf{0} & \mathbf{I}_3 & \mathbf{I}_3 \\ \mathbf{0} & \mathbf{0} & \mathbf{I}_3 & -\mathbf{I}_3 \end{bmatrix} \mathbf{w}_{im}.$$

Or, in matrix notation,

$$\bar{\mathbf{f}}_{im} = \overline{\mathbf{B}}^d_{n1}\mathbf{f}^d_{(i-1)(m-1)} + \mathbf{B}^d_{nm}\mathbf{f}^d_{(i-1)m} + \mathbf{B}^d_{1m}\mathbf{f}^d_{im} + \mathbf{B}^d_{21}\mathbf{f}^d_{(i+1)m} + \mathbf{B}^o_{11}\mathbf{f}^o_{im} + \mathbf{W}\mathbf{w}_{im}. \tag{18.E.15}$$

© 2002 by CRC Press LLC

$$\bar{\mathbf{f}}_{nm} = \begin{bmatrix} \mathbf{0} & \mathbf{0} & \mathbf{0} & -\mathbf{I}_3 & \mathbf{I}_3 & \mathbf{0} & \mathbf{0} & \mathbf{0} \\ \mathbf{0} & \mathbf{0} & \mathbf{0} & -\mathbf{I}_3 & \mathbf{I}_3 & \mathbf{0} & \mathbf{0} & \mathbf{0} \\ \mathbf{0} & \mathbf{0} & \mathbf{0} & \mathbf{0} & \mathbf{0} & \mathbf{0} & \mathbf{0} & \mathbf{0} \\ \mathbf{0} & \mathbf{0} & \mathbf{0} & \mathbf{0} & \mathbf{0} & \mathbf{0} & \mathbf{0} & \mathbf{0} \end{bmatrix} \mathbf{f}^d_{(n-1)(m-1)} + \begin{bmatrix} \mathbf{0} & \mathbf{0} & \mathbf{0} & \mathbf{0} & \mathbf{0} & \mathbf{0} & -\mathbf{I}_3 & \mathbf{0} \\ \mathbf{0} & \mathbf{0} & \mathbf{0} & \mathbf{0} & \mathbf{0} & \mathbf{0} & -\mathbf{I}_3 & \mathbf{0} \\ \mathbf{0} & \mathbf{0} & \mathbf{0} & -\mathbf{I}_3 & \mathbf{I}_3 & \mathbf{0} & \mathbf{0} & \mathbf{0} \\ \mathbf{0} & \mathbf{0} & \mathbf{0} & \mathbf{I}_3 & -\mathbf{I}_3 & \mathbf{0} & \mathbf{0} & \mathbf{0} \end{bmatrix} \mathbf{f}^d_{(n-1)m}$$

$$+ \begin{bmatrix} -\mathbf{I}_3 & \mathbf{I}_3 & -\mathbf{I}_3 & \mathbf{0} & \mathbf{0} & -\mathbf{I}_3 & \mathbf{I}_3 & \mathbf{0} \\ -\mathbf{I}_3 & \mathbf{I}_3 & \mathbf{I}_3 & \mathbf{0} & \mathbf{0} & \mathbf{I}_3 & -\mathbf{I}_3 & \mathbf{0} \\ \mathbf{0} & \mathbf{0} & \mathbf{0} & \mathbf{I}_3 & -\mathbf{I}_3 & \mathbf{I}_3 & \mathbf{0} & \mathbf{0} \\ \mathbf{0} & \mathbf{0} & \mathbf{0} & -\mathbf{I}_3 & -\mathbf{I}_3 & \mathbf{I}_3 & \mathbf{0} & \mathbf{0} \end{bmatrix} \mathbf{f}^d_{nm} + \begin{bmatrix} \mathbf{0} & \mathbf{0} & \mathbf{0} & \mathbf{0} & \mathbf{0} & \mathbf{0} & \mathbf{0} & \mathbf{0} \\ \mathbf{0} & \mathbf{0} & \mathbf{0} & \mathbf{0} & \mathbf{0} & \mathbf{0} & \mathbf{0} & \mathbf{0} \\ \mathbf{0} & -\mathbf{I}_3 & \mathbf{I}_3 & \mathbf{0} & \mathbf{0} & \mathbf{0} & \mathbf{0} & \mathbf{0} \\ \mathbf{0} & -\mathbf{I}_3 & \mathbf{I}_3 & \mathbf{0} & \mathbf{0} & \mathbf{0} & \mathbf{0} & \mathbf{0} \end{bmatrix} \mathbf{f}^d_{1m}$$

$$+ \begin{bmatrix} \mathbf{I}_3 & -\mathbf{I}_3 \\ -\mathbf{I}_3 & \mathbf{I}_3 \\ -\mathbf{I}_3 & \mathbf{0} \\ \mathbf{I}_3 & \mathbf{0} \end{bmatrix} \mathbf{f}^o_{nm} + \begin{bmatrix} \mathbf{I}_3 & \mathbf{I}_3 & \mathbf{0} & \mathbf{0} \\ \mathbf{I}_3 & -\mathbf{I}_3 & \mathbf{0} & \mathbf{0} \\ \mathbf{0} & \mathbf{0} & \mathbf{I}_3 & \mathbf{I}_3 \\ \mathbf{0} & \mathbf{0} & \mathbf{I}_3 & -\mathbf{I}_3 \end{bmatrix} \mathbf{w}_{nm}.$$

Or, in matrix notation,

$$\begin{aligned} \bar{\mathbf{f}}_{nm} &= \bar{\mathbf{B}}^d_{n1}\mathbf{f}^d_{(n-1)(m-1)} + \mathbf{B}^d_{nm1}\mathbf{f}^d_{(n-1)m} + \mathbf{B}^d_{1m}\mathbf{f}^d_{nm} + \mathbf{B}^d_{21}\mathbf{f}^d_{1m} \\ &\quad + \mathbf{B}^o_{11}\mathbf{f}^o_{nm} + \mathbf{W}\mathbf{w}_{nm}. \end{aligned} \tag{18.E.16}$$

Now assemble (18.E.5)–(18.E.16) into the form

$$\mathbf{f}_1 = \mathbf{B}_3\bar{\mathbf{f}}^d_1 + \mathbf{B}_4\mathbf{f}^d_2 + \mathbf{B}_1\mathbf{f}^o_1 + \mathbf{B}_2\mathbf{f}^o_2 + \mathbf{W}_1\mathbf{w}_1 \tag{18.E.17}$$

where

$$\bar{\mathbf{f}}^d_1 = \begin{bmatrix} \mathbf{f}_{1n1} \\ \mathbf{f}^d_1 \end{bmatrix}, \mathbf{f}^d_j = \begin{bmatrix} \mathbf{f}^d_{1j} \\ \mathbf{f}^d_{2j} \\ \vdots \\ \mathbf{f}^d_{nj} \end{bmatrix}, \mathbf{f}^o_j = \begin{bmatrix} \mathbf{f}^o_{1j} \\ \mathbf{f}^o_{2j} \\ \vdots \\ \mathbf{f}^o_{nj} \end{bmatrix}, \mathbf{w}_j = \begin{bmatrix} \mathbf{w}_{1j} \\ \mathbf{w}_{2j} \\ \vdots \\ \mathbf{w}_{nj} \end{bmatrix}, \mathbf{f}_j = \begin{bmatrix} \bar{\mathbf{f}}_{1j} \\ \bar{\mathbf{f}}_{2j} \\ \vdots \\ \bar{\mathbf{f}}_{nj} \end{bmatrix}$$

$$\mathbf{B}_3 = \begin{bmatrix} \mathbf{B}_{1n1} & \mathbf{B}^d_{11} & \mathbf{B}^d_{21} & \mathbf{0} & \cdots & \mathbf{0} & \mathbf{B}^d_{n1} \\ \mathbf{0} & \mathbf{B}^d_{01} & \ddots & \ddots & \ddots & & \mathbf{0} \\ \vdots & \ddots & \ddots & \ddots & \ddots & \ddots & \vdots \\ \mathbf{0} & & \ddots & \ddots & \ddots & \ddots & \mathbf{0} \\ \mathbf{0} & \ddots & & \ddots & \ddots & \ddots & \mathbf{B}^d_{21} \\ \bar{\mathbf{B}}_{1n1} & \mathbf{B}^d_{21} & \mathbf{0} & \cdots & \mathbf{0} & \mathbf{B}^d_{01} & \mathbf{B}^d_{11} \end{bmatrix}$$

$$\mathbf{B}_4 = BlockDiag[\ldots, \mathbf{B}^d_{12}, \mathbf{B}^d_{12}, \ldots],$$

$$\mathbf{B}_2 = BlockDiag[\ldots, \mathbf{B}^o_{12}, \mathbf{B}^d_{12}, \ldots],$$

© 2002 by CRC Press LLC

$$\mathbf{B}_1 = \begin{bmatrix} \mathbf{B}_{11}^o & \mathbf{0} & \cdots & \cdots & \mathbf{0} \\ \mathbf{B}_{01}^o & \ddots & \ddots & & \vdots \\ \mathbf{0} & \ddots & \ddots & \ddots & \vdots \\ \vdots & \ddots & \ddots & \mathbf{B}_{11}^o & \mathbf{0} \\ \mathbf{0} & \cdots & \mathbf{0} & \mathbf{B}_{01}^o & \mathbf{B}_{n1}^o \end{bmatrix},$$

$$\mathbf{W}_1 = \mathit{BlockDiag}\ [\ldots, \mathbf{W}, \mathbf{W}, \ldots].$$

Also, from (18.E.5)–(18.E.16)

$$\mathbf{f}_2 = \mathbf{B}_5\bar{\mathbf{f}}_2^d + \mathbf{B}_6\mathbf{f}_2^d + \mathbf{B}_4\mathbf{f}_3^d + \mathbf{B}_7\mathbf{f}_2^o + \mathbf{B}_2\mathbf{f}_3^o + \mathbf{W}_1\mathbf{w}_2, \tag{18.E.18}$$

where

$$\mathbf{B}_5 = \left[\mathbf{0}, \bar{\mathbf{B}}_5\right], \mathbf{B}_7 = \mathit{BlockDiag}\left[\cdots, \mathbf{B}_{11}^o, \mathbf{B}_{11}^o, \cdots\right],$$

$$\bar{\mathbf{B}}_5 = \begin{bmatrix} \mathbf{0} & \mathbf{0} & \cdots & \mathbf{0} & \bar{\mathbf{B}}_{n1}^d \\ \bar{\mathbf{B}}_{n1}^d & \ddots & \ddots & & \mathbf{0} \\ \mathbf{0} & \ddots & \ddots & \ddots & \vdots \\ \vdots & \ddots & \ddots & \ddots & \mathbf{0} \\ \mathbf{0} & \cdots & \mathbf{0} & \bar{\mathbf{B}}_{n1}^d & \mathbf{0} \end{bmatrix}, \mathbf{B}_6 = \begin{bmatrix} \bar{\mathbf{B}}_{12}^d & \mathbf{B}_{21}^d & \mathbf{0} & \cdots & \mathbf{0} & \mathbf{B}_{n2}^d \\ \mathbf{B}_{n2}^d & \ddots & \ddots & \ddots & & \mathbf{0} \\ \mathbf{0} & \ddots & \ddots & \ddots & \ddots & \vdots \\ \vdots & \ddots & \ddots & \ddots & \ddots & \mathbf{0} \\ \mathbf{0} & & \ddots & \ddots & \ddots & \mathbf{B}_{21}^d \\ \mathbf{B}_{21}^d & \mathbf{0} & \cdots & \mathbf{0} & \mathbf{B}_{n2}^d & \bar{\mathbf{B}}_{12}^d \end{bmatrix}.$$

Also from (18.E.5)–(18.E.16)

$$\mathbf{f}_3 = \bar{\mathbf{B}}_5\mathbf{f}_2^d + \mathbf{B}_6\mathbf{f}_3^d + \mathbf{B}_4\mathbf{f}_4^d + \mathbf{B}_7\mathbf{f}_3^o + \mathbf{B}_2\mathbf{f}_4^o + \mathbf{W}_1\mathbf{w}_3, \tag{18.E.19}$$

$$\mathbf{f}_m = \bar{\mathbf{B}}_5\mathbf{f}_{(m-1)}^d + \mathbf{B}_8\mathbf{f}_m^d + \mathbf{B}_7\mathbf{f}_m^o + \mathbf{W}_1\mathbf{w}_m, \tag{18.E.20}$$

$$\mathbf{B}_8 = \begin{bmatrix} \mathbf{B}_{1m}^d & \mathbf{B}_{21}^d & \mathbf{0} & \cdots & \mathbf{0} & \mathbf{B}_{nm}^d \\ \mathbf{B}_{nm} & \ddots & \ddots & \ddots & & \mathbf{0} \\ \mathbf{0} & \ddots & \ddots & \ddots & \ddots & \vdots \\ \vdots & \ddots & \ddots & \ddots & \ddots & \mathbf{0} \\ \mathbf{0} & & \ddots & \ddots & \ddots & \mathbf{B}_{21}^d \\ \mathbf{B}_{21}^d & \mathbf{0} & & \mathbf{0} & \mathbf{B}_{nm}^d & \mathbf{B}_{1m}^d \end{bmatrix}$$

Or, simply, the vector form of (18.E.17)–(18.E.19) is

$$\mathbf{f} = \mathbf{B}^d\mathbf{f}^d + \mathbf{B}^o\mathbf{f}^o + \mathbf{W}^o\mathbf{w}, \tag{18.E.21}$$

where

$$\mathbf{f} = \begin{bmatrix} \mathbf{f}_1 \\ \vdots \\ \mathbf{f}_m \end{bmatrix}, \mathbf{f}^d = \begin{bmatrix} \bar{\mathbf{f}}_1^d \\ \mathbf{f}_2^d \\ \vdots \\ \mathbf{f}_m^d \end{bmatrix}, \mathbf{f}^o = \begin{bmatrix} \mathbf{f}_1^o \\ \vdots \\ \mathbf{f}_m^o \end{bmatrix}, \mathbf{w} = \begin{bmatrix} \mathbf{w}_1 \\ \vdots \\ \mathbf{w}_m \end{bmatrix},$$

© 2002 by CRC Press LLC

$$\mathbf{W}^o = BlockDiag\,[\cdots,\ \mathbf{W}_1,\ \mathbf{W}_1, \cdots],$$

$$\mathbf{B}^d = \begin{bmatrix} \mathbf{B}_3 & \mathbf{B}_4 & \mathbf{0} & \cdots & \mathbf{0} \\ \mathbf{B}_5 & \mathbf{B}_6 & \ddots & \ddots & \vdots \\ \mathbf{0} & \overline{\mathbf{B}}_5 & \ddots & \ddots & \mathbf{0} \\ \vdots & \ddots & \ddots & \mathbf{B}_6 & \mathbf{B}_4 \\ \mathbf{0} & \cdots & \mathbf{0} & \overline{\mathbf{B}}_5 & \mathbf{B}_8 \end{bmatrix}, \mathbf{B}^o = \begin{bmatrix} \mathbf{B}_1 & \mathbf{B}_2 & \mathbf{0} & \cdots & \mathbf{0} \\ \mathbf{0} & \mathbf{B}_7 & \ddots & \ddots & \vdots \\ \vdots & \ddots & \ddots & \ddots & \mathbf{0} \\ \vdots & & \ddots & \ddots & \mathbf{B}_2 \\ \mathbf{0} & \cdots & \cdots & \mathbf{0} & \mathbf{B}_7 \end{bmatrix}.$$

References

1. R. E. Skelton, Systems design, the absentee in system theory, *American Automatic Control Conference,* San Diego, CA, June 1999.
2. R. E. Skelton, A systems approach to integrate structure and control design, *SPIE Conference on Mathematics for Smart Structures,* Newport Beach, CA, March 2000.
3. K. M. Grigoriadis, G. Zhu, and R. E. Skelton, Optimal redesign of linear systems, *Journal of Dynamic Systems, Measurement and Control*, 118(3), 598–605, September 1996.
4. M. P. Bendsoe, Optimal shape design as a material distribution problem, *Structural Optimization*, 1, 193–202, 1989.
5. M. P. Bendsoe, *Optimization of Structural Topology, Shape, and Material,* Springer, Berlin, 1995.
6. M. P. Bendsoe and N. Kikuchi, Generating optimal topologies in structural design using a homozenization method, *Computer Methods in Applied Mechanics and Engineering*, 71, 197–224, 1988.
7. A. R. Diaz and M. P. Bendsoe, Shape optimization of structures for multiple loading conditions using a homogenization method, *Structural Optimization*, 4, 17–22, 1992.
8. A. H. Simmons, C. A. Michal, and L. W. Jelinski, Molecular orientation and two-component nature of the crystalline fraction of dragline silk, *Science*, 271, 84–87, 1996.
9. Y. Termonia, Molecular modeling of spider silk elasticity, *Macromolecules,* 27, 7378–7381, 1994.
10. B. I. Yakobson and R.E. Srnalley, Fullerene nanotubes beyond, *American Scientist,* 85, 324–337, 1997.
11. R. Chu, Tensegrity, *Journal of Synergetics,* 2(l), 1988.
12. R. B. Fuller and R. Marks, *The Dymaxion World of Buckminister Fuller*, Anchor Books Edition, Garden City, NY, 1973.
13. R. Buckminister Fuller, Tensile-integrity structures, US Patent 3,063,521, 1962.
14. R. Buckminister Fuller, *Synergetics Explorations in the Geometry of Thinking,* Collier Macmillan Publishers, London, 1975.
15. H. Furuya, Concept of deplorable tensegrity structures in space applications, *International Journal of Space Structures*, 7(2),143–151, 1992.
16. D. E. Ingber, Cellular tensegrity: Defining new rules of biological design that govern the cytoskeleton, *Journal of Cell Science*, 104(3), 613–627, 1993.
17. D. E. Ingber, Tensegrity: The architectural basis of cellular mechanotransduction, *Annual Review of Physiology,* 59, 575–599, 1997.
18. D. E. Ingber, Architecture of life, *Scientific American*, 48–57, January 1998.
19. H. Kenner, *Geodesic Math and How to Use It*, University of California Press, Berkeley, 1976.
20. R. Motro, Tensegrity systems: The state of the art, *International Journal of Space Structures*, 7(2), 75–83, 1992.
21. I. J. Oppenheim and W. J. Williams, Tensegrity prisms as adaptive structures, ASME Annual meeting, Dallas, November 1997.
22. A. Pugh, *An Introduction to Tensegrity*, University of California Press, Berkeley, 1976.
23. R. Adhikari, R. E. Skelton, and W. J. Helton, Mechanics of Tensegrity Beams, UCSD, Structural System and Control Lab., Report No. 1998-1, 1998.

© 2002 by CRC Press LLC

24. R. E. Skelton and C. Sultan, Controllable tensegrity, a new class of smart structures, SPIE *Conference, Mathematics and Control in Smart Structures,* San Diego, March 1997.
25. R. E. Skelton and M. He., Smart tensegrity structure for nestor, *SPIE Conference, Smart Structures and Integrated Systems,* San Diego, CA, March 1997.
26. H. Murakami, Y. Nishimura, T. J. Impesullo, and R. E. Skelton. A virtual reality environment for tensegrity structures, In *Proceedings of the 12th ASCE Engineering Mechanics Conference,* 1998.
27. D. Williamson and R. E. Skelton. A general class of tensegrity systems: Geometric definition, *ASCE Conference Engineering Mechanics for the 21st Century*, pp. 164–169, La Jolla, CA, May 1998.

© 2002 by CRC Press LLC